MITSUBISHI HEAVY INDUSTRIES

Packaged Air-Conditioners Catalogue for Europe

FD series

2026



FDT
4 way



FDTC
4 way compact

New RC-ES1
Stylish Remote Control



New M-Air PRO
Mobile App





MOVE THE WORLD FORWARD MITSUBISHI HEAVY INDUSTRIES GROUP

Fine snow panel



Shadow black panel

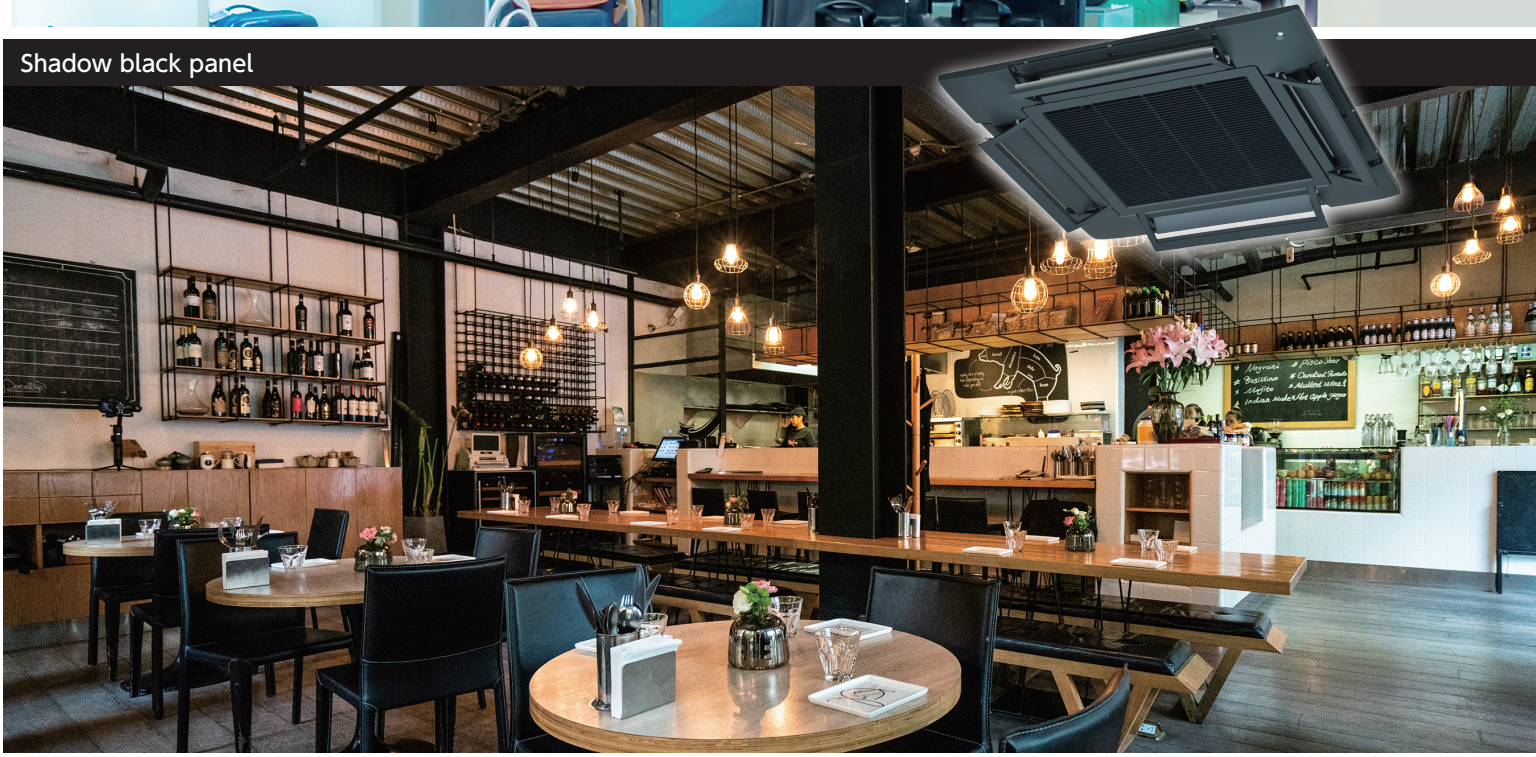

Packaged Air-Conditioners

FD series

High Performance
Air-Conditioning

The PAC range from Mitsubishi Heavy Industries Thermal Systems is ideal for air-conditioning in offices, shops, restaurants, and bars, as well as other commercial environments. The versatility of the PAC range, offers you a wide selection of models in function of your installation needs. The modern and attractive design of our indoor units is harmoniously integrated into any atmosphere creating a pleasant and relaxing environment.







Contents

Product Information		4
Product Line Up		12
Outdoor Units		14
Indoor Units	Benefits Summary	20
FDT	Ceiling Cassette -4way-	22
FDTC	Ceiling Cassette -4way compact-	38
FDU	Duct Connected -High Static Pressure-	46
FDUM	Duct Connected -Low/Middle Static Pressure-	56
SRK	Wall Mounted	70
FDE	Ceiling Suspended	78
FDF	Floor Standing	92
Outdoor Unit Dimensions		101
Control Systems		106
Air Handling Unit Interface		108
Energy Efficient and Environmentally Conscious		112





New Generation



Ceiling Cassette
4way

FDT

R410A
R32
Hybrid

- Automatic energy saving control
- Keep maximum comfort with minimal draft
- Quiet operation

High energy efficiency with new technology

FDT can achieve higher seasonal efficiency by utilising Mitsubishi Heavy Industries latest technology.

● SEER and SCOP is defined in European regulations. Please refer to P112.

SEER in cooling Previous(VG(R410A)) New(VH(R32))

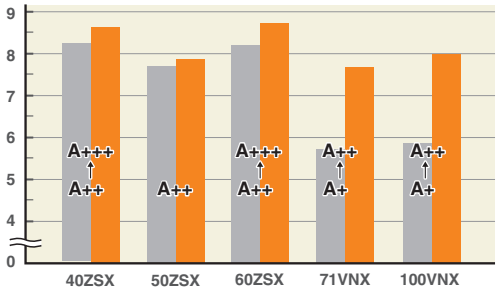

SCOP in heating Previous(VG(R410A)) New(VH(R32))

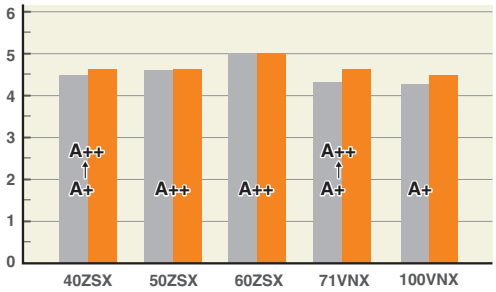

Quieter noise & Improved aerodynamic performance of the unit

New technology achieved low noise while keeping capacity and comfort by reducing the pressure fluctuation in an indoor unit.
A fan guard ensures both safety and quietness.



Turbo fan



Fan guard
(standard equipment)

Various panels available

You can choose white and black panel according to the atmosphere and purpose of the room.



White panel
(Fine snow)



Black panel
(Shadow black)

New flexible flap control for draft prevention



Draft Prevention Panel (Option)

Each of the 4 flaps can be controlled individually at each operation mode. They change air flow direction and prevent drafts occurring. This function also provides flexible control of air flow direction.



Motion Sensor (Option)

Motion sensor (option) detects human activity. Energy saving control is achieved by shifting set temperature according to detected amount of activity.

Ceiling Cassette
4way compact

FDTC

R32 R410A
Hybrid

- More comfort and Higher energy savings
- European design
- Lower noise



A' Design Award and Competition is the World's largest, most prestigious and influential design accolade, the highest achievement in design. A' Design Award Winner Logo, symbolizes exceptional design excellence in products, projects and services.

European Design & Flat Panel

Thin Panel
FDTC thin panel fit within 10mm from the ceiling.

Unique Grille Design
Honeycomb grille



Big Louver
Improved distribution

Integrated Ceiling System Design(600×600)

Various panels available

You can choose the grill design according to the atmosphere and purpose of the room.



Grid type

Draft Prevention Panel and Motion Sensor (Option)

Draft prevention panel and motion sensor are available on FDTC, just like on FDT.

Floor standing

FDF

R32

- New floor standing unit compatible with R32
- Increaced Energy efficiency
- R32 leak detector built-in



Improved features

Heat exchanger design optimized for R32 operation. The leak detector device will be integrated at the bottom of the unit.
Remote control upgrated for leak detector functions.

Draft Prevention

Keep maximum comfort with minimal draft: FDT & FDTC control flaps with more flexibility.



Ceiling cassette Compact
FDTC



Ceiling cassette
FDT

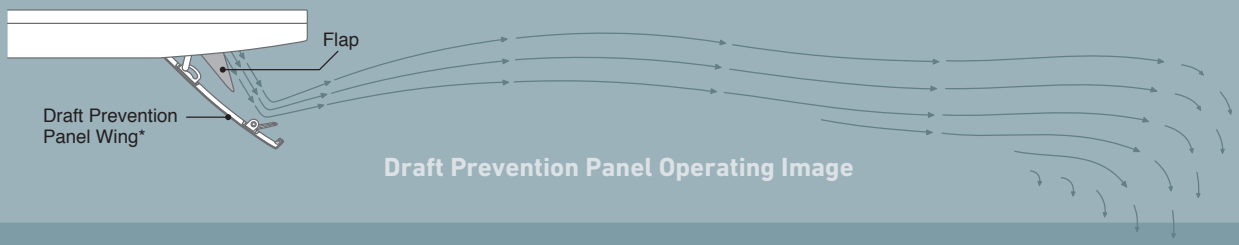

Draft Prevention Panel Operating Image



Draft Prevention Panel off

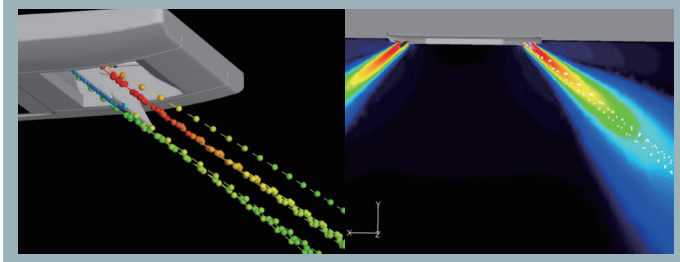

Draft Prevention Panel working *

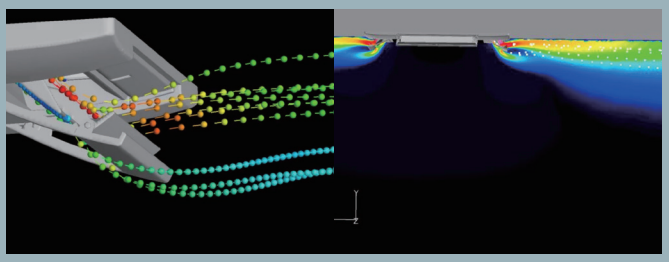

Draft Prevention Panel provides a comfortable airflow without any draft feeling. Whether cooling or heating a room, the remote control can be used to instantly suppress any warm or cool drafts. This accurately assists how air flow is directed out of the indoor unit.

* Images is for illustration purposes.

Motion Sensor

Energy saving operation by detecting human movement

3 Step Control

1	Power Control	Motion sensor (option) detects human activity. Energy saving control is achieved by shifting set temperature according to detected amount of activity.
2	Stand by	Unit will go on stand-by mode when no activity is detected. When the motion sensor detects activity again, the unit it will automatically re-start operation.
3	Auto Off	Unit will go off automatically when no activity is detected for 12 hours.

Optional for models


FDT


FDTC


FDU

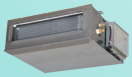
FDUM


FDE


FDF



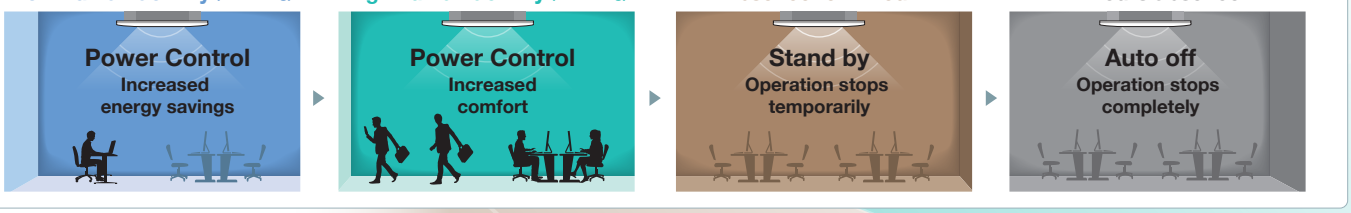

in cooling

Set temperature **26**°C

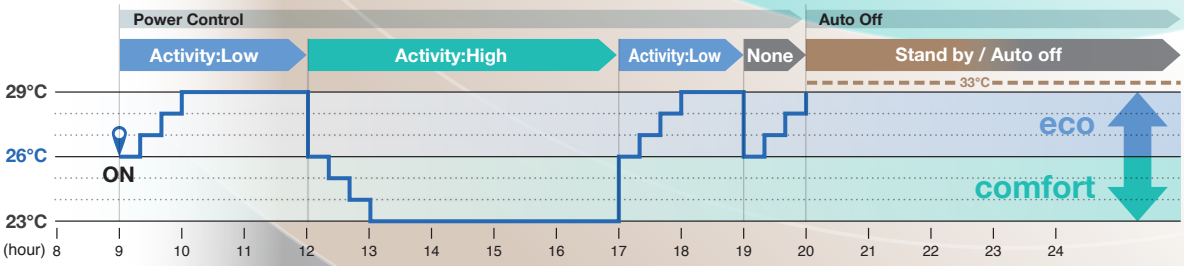

in heating

Set temperature **22**°C

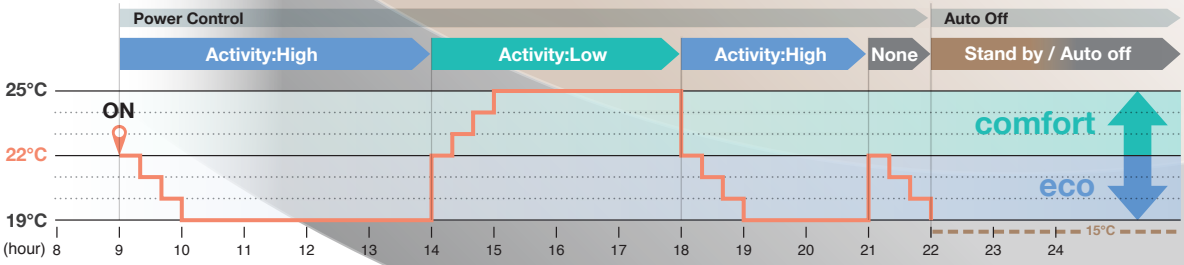

Operation mode and Control of Motion sensor

eco operation
comfort operation

			Operation mode				
			Auto	Cool	Heat	Dry	Fan
Power Control *1	Human activity	Low	Cooling +3°C / Heating +3°C	+3°C	+3°C	—	—
		High	Cooling -3°C / Heating -3°C	-3°C	-3°C	—	—
		None	Cooling +3°C / Heating -3°C	+3°C	-3°C	—	—
Auto Off *2			●	●	●	●	●

*1 Set temperature is revised maximum ±3℃ at Cooling/Heating mode by detecting heat volume movement.
*2 Absence for 1 hour ⇒ Operation stops (“Stand-by”) 12 hours absence ⇒ Operation stops completely

New!

Stylish Remote Control

2025 Design Award

reddot winner 2025

The RC-ES1 Series has been honored with the prestigious Red Dot Design Award 2025 in the Product Design Category.

A'DESIGN AWARD & COMPETITION WINNER 2025 GOLD

The RC-ES1 Series has been honored with the prestigious Gold A' Design Award in the Repair, Restoration, and Maintenance Products Design Category.





RC-ES1

- Stylish and sophisticated design
- Compact size (86×86mm)
- Remote control with Bluetooth® wireless technology







Optimized User Interface



The functions available on the remote have been minimized to focus on users' core needs, simplifying operation and avoiding overly complex settings. A wide range of functions, including service settings, remains accessible through the app.

M-Air PRO

You can control the air-conditioner by installing App on your smart phone

GET IT ON Google Play

Download on the App Store

Search for "M-Air PRO" from the Google Play™ store for Android™ and App Store for iPhone.

Please check the app stores for the latest supported OS version information.

App Store and iphone are registered trademark of Apple Inc.
Google Play and the Google Play logo are trademarks of Google LLC.

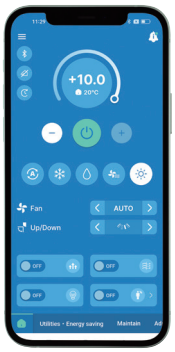

Wireless connection

- Remote control with Bluetooth® wireless technology
- Easy set-up of indoor units
- Notifications of abnormal conditions or operational data from the remote control will be sent to your smartphone.



Information screen

By looking at the information screen, you can check the current operating conditions at a glance.



Central management by smart phone

You can select and change the settings of multiple rooms with only one action on your smartphone.*
Easy setup and management of up to 20 units via smartphone and tablets, up to 10 settings could be saved in the app.

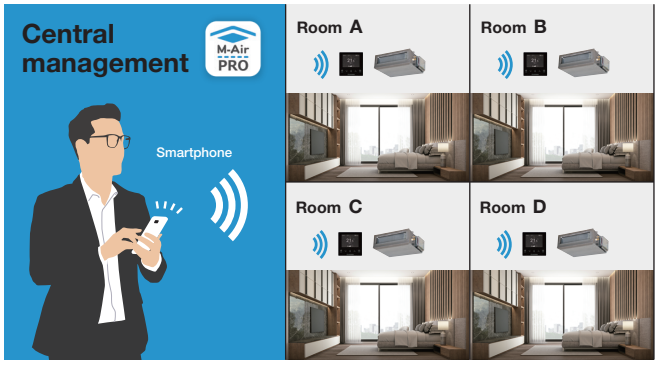

Easy installation with the new casing structure

The casing is separated into the lower and the upper case.
By inserting the upper case into the lower case embedded to the wall, the remote could be easily installed.

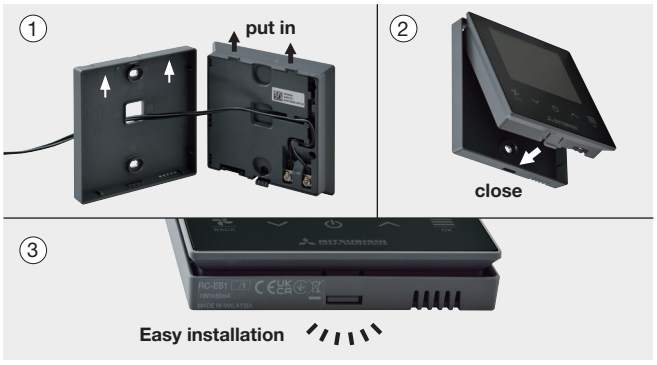

*The function would be available when the smartphone is connected to the remote control with Bluetooth® wireless technology.

Easy to instinctively operate with simplified icons

Operation settings

Operation mode	Heating / Cooling / Fan / Dry /Auto
High power	ON / OFF
Ventilation	ON / OFF
Timer	Set ON / OFF timer by hour Set ON / OFF timer by clock
Air direction	Upper / lower flap, Flap direction

Common settings

Bluetooth	ON / OFF
Pairing mode	Make a new Bluetooth paring
App QR code	QR code for the app

Display & sound settings

Brightness	1-10
Lighting time	1-10
Operation sound	Sound On / Sound Off

Information screen

- **Temporary stop**
- **Thermo-off**
- **Fan operation**
- **Cooling test run**
- **Static pressure adjustment**
- **Dew drop prevention control**
- **Home leave operation**
- **High power operation**
- **Eco operation**
- **Set temp. shift**
- **Warm up operation**
- **Heating preparation**
- **Defrost operation**
- **Outdoor silent operation**
- **Motion sensor control**
- **Anti draft control**
- **Demand control**
- **Filter cleaning time**
- **Back-up control in operation**
- **Fault back-up control in operation**
- **Periodical check indication**
- **On timer setting**
- **OFF timer setting**
- **Weekly timer setting**
- **Sleep timer setting**

The Bluetooth® word mark and logos are registered trademarks owned by Bluetooth SIG, Inc. and any use of such marks by MITSUBISHI HEAVY INDUSTRIES THERMAL SYSTEMS, LTD. is under license.
Other trademarks and trade names are those of their respective owners.
"QR Code" is a registered trademark of DENSO WAVE INCORPORATED.

Remote Control

Simple use with advanced settings REMOTE CONTROL

RC-EX3D



Function Switch

The function switch allows the user to select preferred two functions that are desired from the seven available functions shown.
These functions can be used by simply pressing the button after they are set, allowing you to use your preferable functions immediately.

1. Draft prevention ON/OFF



Anti draft can be turned ON/OFF with a single tap of the button.

2. High Power Mode

15 min

High Power Mode achieve excessive cooling / heating capacity in 15 minutes to quickly adjust the room temperature to a comfortable level.

3. Energy Saving Mode

Temperature is set to be optimized to save energy without losing comfort.

4. Quiet Mode

Outdoor unit starts to operate quietly by activating this mode. The time of this mode can be set in conjunction with Indoor Silent Timer.

5. Home Leave Mode

Home leave mode maintains the room temperature at a moderate level.

6. Favourite Mode

Operation mode, set temperature, fan speed and air flow direction will automatically be adjusted to the programmed favourite setting.

7. Filter Sign

Now

Announces the due time for cleaning the air filter.

Draft Prevention Setting (only FDT•FDTC series)

User can enable/disable the motion of Draft prevention panel for each air outlet for each operation mode. This function can be set while operating.

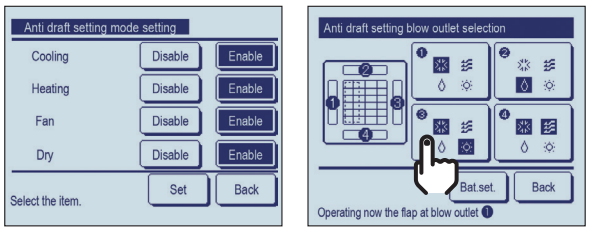

Easy Adjustment of the Air Flow

User can visually confirm and set the direction of flaps using the visual display on the remote controller.

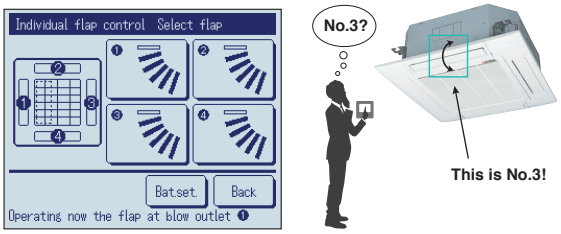

Motion Sensor Control

Presence of humans and activity are detected by a motion sensor to perform various controls.

1 Select Enable / Disable

Motion sensor control



Enable/Disable

Select Enable / Disable for the motion sensor of the indoor unit connected to the R/C.

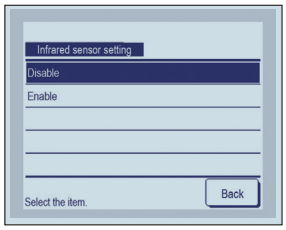

2 Select Enable / Disable per control

- **Power control**
- **Auto-off**

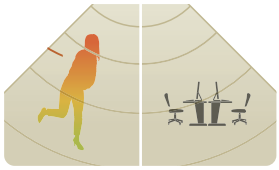

Enable/Disable

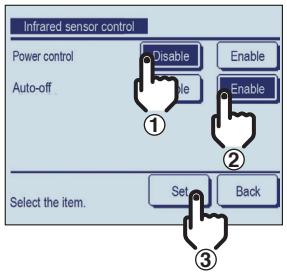

Additional Functions of External Input / Output

The external input/output of indoor unit by remote controller can set input/output based on user's demand.



Remote surveillance system



Card key on-off

External Input

Two of the following could be selected

CNT, CNTA

Input
- Run / Stop
- Permission/Prohibition
- Cooling/Heating
- Emergency Stop
- Set temp. shift
- Forced thermo-off
- IU operation stop
- Silent mode

External Output

Four of the following could be selected

CNT

Output
- Operation
- Heating
- Compressor ON (thermo-ON)
- Inspection
- Cooling (defrosting)
- Fan operation
- Fan operation with Phi or Hi
- Fan operation with Me or Lo
- Defrosting (oil return in heating operation)
- Ventilation
- Heater ON
- Free cooling
- IU overload alarm

Silent Mode Control

The Outdoor unit is controlled prioritising quiet operation. Silent mode control must be set to the F1 or F2 switch. User can start/stop the silent mode control with a single tap of a button.

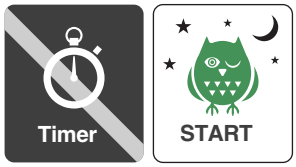

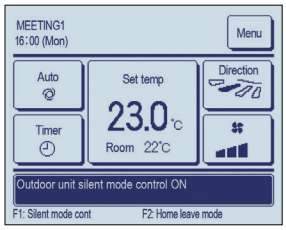

Language Switching

User can select from the following languages and also switch them on the top display.



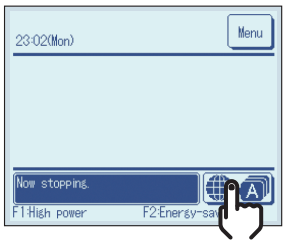

English German French Spanish

Polish Italian Dutch Turkish

Portuguese

Indoor Unit Capacity Display

Capacities of Indoor units connected to the RC-EX3D are displayed.

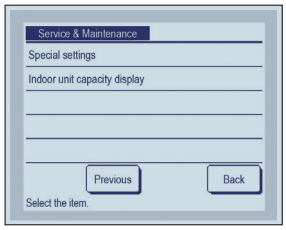

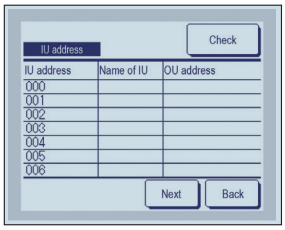

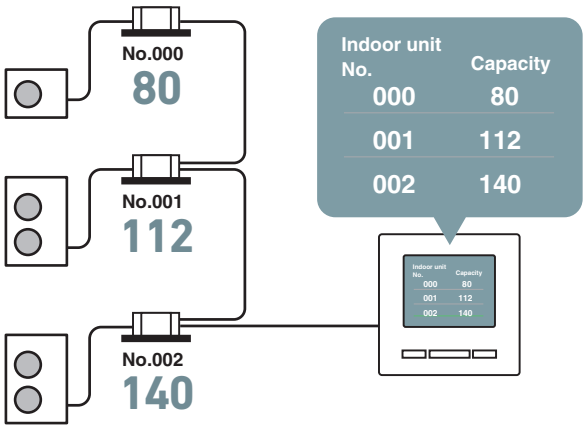

Error display



"Error" If any error occurs on the air-conditioner, the "Unit protection stop" is indicated on the message display.



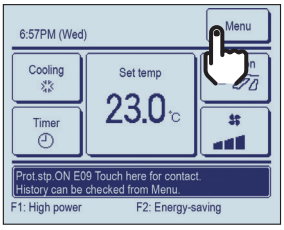

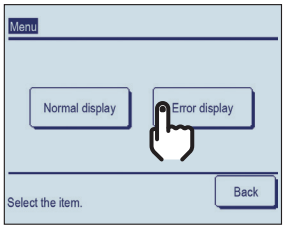

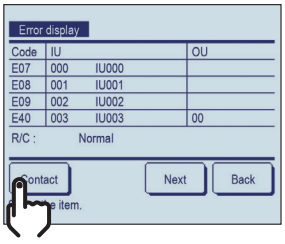



Product line up

SINGLE SPLITS

FD series				HP	1.5	2.0	2.5	3.0	4.0
				kW	4.0	5.0	6.0	7.1	10.0
Ceiling Cassette	FDT 4way  P22	R32	1 Phase		●	●	●	●	●
			3 Phase						●
		R410A	1 Phase						●
			3 Phase						●
	FDTC 4way compact  P38	R32	1 Phase		●	●	●		
			3 Phase						
Duct Connected	FDU High Static pressure  P46	R32	1 Phase					●	●
			3 Phase						●
		R410A	1 Phase						●
			3 Phase						●
	FDUM Low/Middle Static pressure  P56	R32	1 Phase		●	●	●	●	●
			3 Phase						●
		R410A	1 Phase						●
			3 Phase						●
Wall Mounted	SRK  P70	R32	1 Phase					●	●
			3 Phase						●
		R410A	1 Phase						
			3 Phase						
Ceiling Suspended	FDE  P78	R32	1 Phase		●	●	●	●	●
			3 Phase						●
		R410A	1 Phase						●
			3 Phase						●
Floor Standing	FDF  P92	R32	1 Phase					●	●
			3 Phase						●
		R410A	1 Phase						●
			3 Phase						●

Capacity Range (Nominal Cooling Capacity)											
		Micro Inverter 						Standard Inverter 			
5.0	6.0	4.0	5.0	6.0	8.0	10.0	12.0	3.0	3.5	4.0	5.0
12.5	14.0	10.0	12.5	13.6	20.0	25.0	27.0	7.1	9.0	10.0	12.1
●	●	●	●	●				●	●	●	●
●	●	●	●	●							
●	●	●	●	●							
●	●	●	●	●							
●	●	●	●	●				●	●	●	●
●	●	●	●	●	●	●	●				
●	●	●	●	●							
●	●	●	●	●	●	●					
●	●	●	●	●				●	●	●	●
●	●	●	●	●							
●	●	●	●	●							
●	●	●	●	●							
		●						●		●	
		●									
		●									
		●									
●	●	●	●	●				●	●	●	●
●	●	●	●	●							
●	●	●	●	●							
●	●	●	●	●							
●	●	●	●	●				●	●	●	
●	●	●	●	●							
●	●	●	●	●							
●	●	●	●	●							

Outdoor units

Our new advanced technology has high efficiency, strong heating and long piping. This contributes to the environmental protection through energy saving and permits installation of the units (4–6HP) considering a heating operation under temperature conditions down to -20˚C. The Standard Inverter series offer optimised efficiency at a reasonable cost.

Line up

HP	1.5	2	2.5	3	3.5	4	5	6	8	10	12
Hyper Inverter	●	●	●	●	–	●	●	●	–	–	–
Micro Inverter	–	–	–	–	–	●	●	●	●	●	●
Standard Inverter	–	–	–	●	●	●	●	–	–	–	–

Hyper Inverter

R32



SRC40ZSX-W1 (1.5HP)
SRC50ZSX-W3 (2.0HP)
SRC60ZSX-W3 (2.5HP)

R32



FDC100VNX/VSX-W (4.0HP)
FDC125VNX/VSX-W (5.0HP)
FDC140VNX/VSX-W (6.0HP)

R32



FDC71VNX-W (3.0HP)

R410A



FDC100VNX/VSX (4.0HP)
FDC125VNX/VSX (5.0HP)
FDC140VNX/VSX (6.0HP)

Micro Inverter

R32



FDC100VNA-W/VSA-W (4.0HP)
FDC125VNA-W/VSA-W (5.0HP)
FDC140VNA-W/VSA-W (6.0HP)

R32



FDC200VSA-W (8.0HP)
FDC250VSA-W (10.0HP)
FDC280VSA-W (12.0HP)

R410A



FDC100VNA/VSA (4.0HP)
FDC125VNA/VSA (5.0HP)
FDC140VNA/VSA (6.0HP)

R410A



FDC200VSA (8.0HP)

Standard Inverter

R32



FDC71VNP-W (3.0HP)

R32



FDC90VNP-W (3.5HP)
FDC100VNP-W (4.0HP)

R410A



FDC250VSA (10.0HP)

R32



FDC125VNP-W (5.0HP)

High Efficiency

Outdoor units high efficiency levels are achieved thanks to our latest technologies, such as high efficient twin rotary compressors.

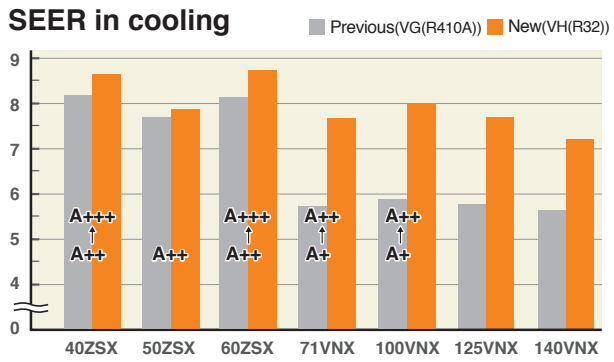

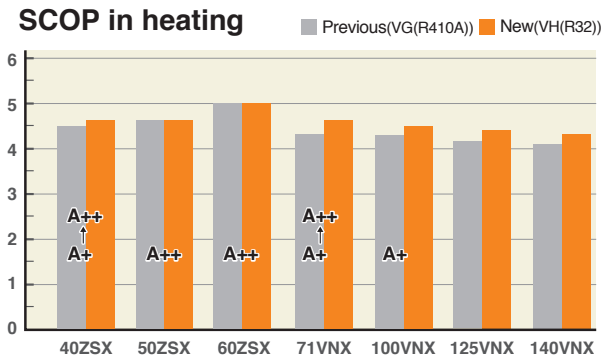

· In case of ceiling cassette 4way unit.

Our Latest Technologies

1 High efficiency performance on the DC twin rotary compressors

Adoption of DC twin rotary compressor has enabled to utilize a high-speed range of up to 120 rps at the maximum to secure the required capacity.





DC twin rotary compressor

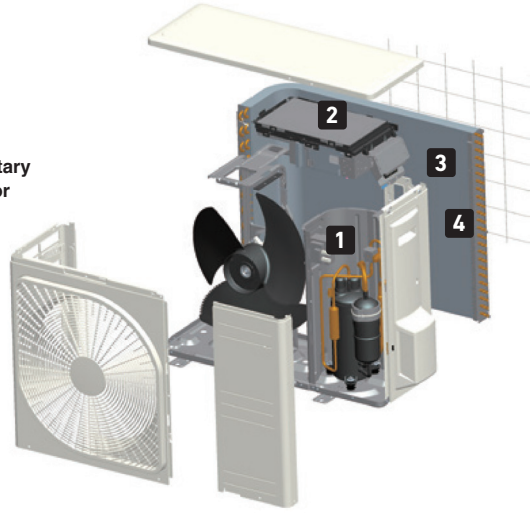

2 Vector inverter control

Optimum compressor control has been realized by employing the vector control* and the starting current has been improved significantly compared with former models. Moreover, vibration has been reduced.

* Vector control means a technique to realize an optimum control by converting the current wave to a smooth sinusoidal waveform

Better partial load efficiency

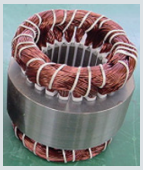

Distributed winding motor



Centralized winding motor

* only R32 models

3 Heat exchanger

Thanks to changing fin configuration from flat sheet to M shape fin. This high dimensional structure provides optimum balance of heat transfer and airflow.

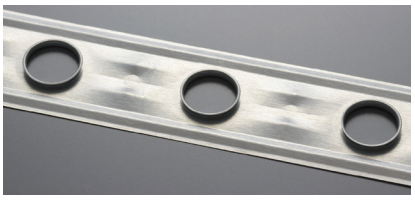

sectional structure

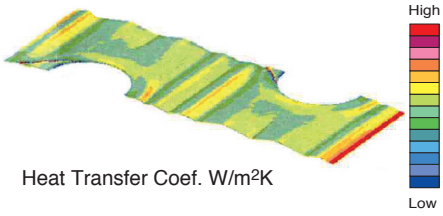

Heat Transfer Coef. W/m²K

4 Blue fin

Due to application of blue coated fins (KS101) on the heat exchanger of the new outdoor unit, corrosion resistance has been improved compared to previous models.

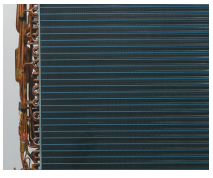

Blue Fin

Hyper Inverter	3–6HP
Micro Inverter	4–12HP
Standard Inverter	3.5–5HP

Leading Powerful Heating Capacity

Hyper Inverter

The maximum heating capacity can be increased by:
- optimizing the refrigerant control and use of the electric expansion valve
- Utilization of the twin rotary compressors
- Nominal heating capacity can be reached when outdoor temperature is -8°C
- Also effective to be used in cold areas

Temperature of supply air can reach 40˚C in 4 minutes after start up under low temperature operation conditions (at both indoor and outdoor temperature of 2˚C) and can reach 50˚C in 8 minutes after that.

Heating capacity (in case of 5HP, 3Phase 380V)

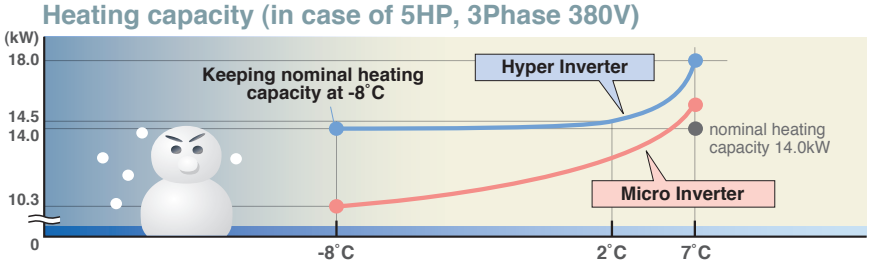

model name	nominal heating capacity (kW at outdoor temperature of 7˚C)	heating capacity at outdoor temperature of -8˚C
FDC100VSX(4HP, 3Phase 380V)	11.2kW	11.2kW
FDC125VSX(5HP, 3Phase 380V)	14.0kW	14.0kW
FDC140VSX(6HP, 3Phase 380V)	16.0kW	16.0kW

Please refer to our technical manual for installation conditions, operation range and heating/cooling capacities. (including 1Phase 220V)

Heating capacity

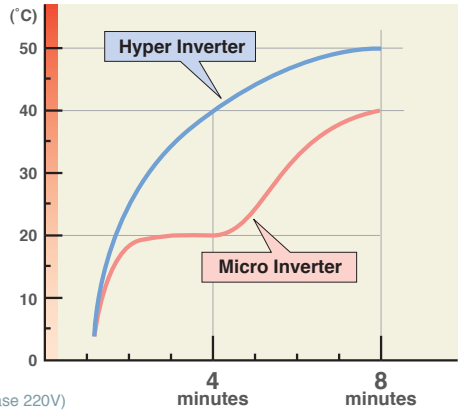

Wide Range of Operation

Our new advanced technology has expanded the heating and cooling operation range.This permits installation of the units under a low outdoor temperature conditions down to -15˚C/-20˚C In heating operation and -15˚C in cooling operation.

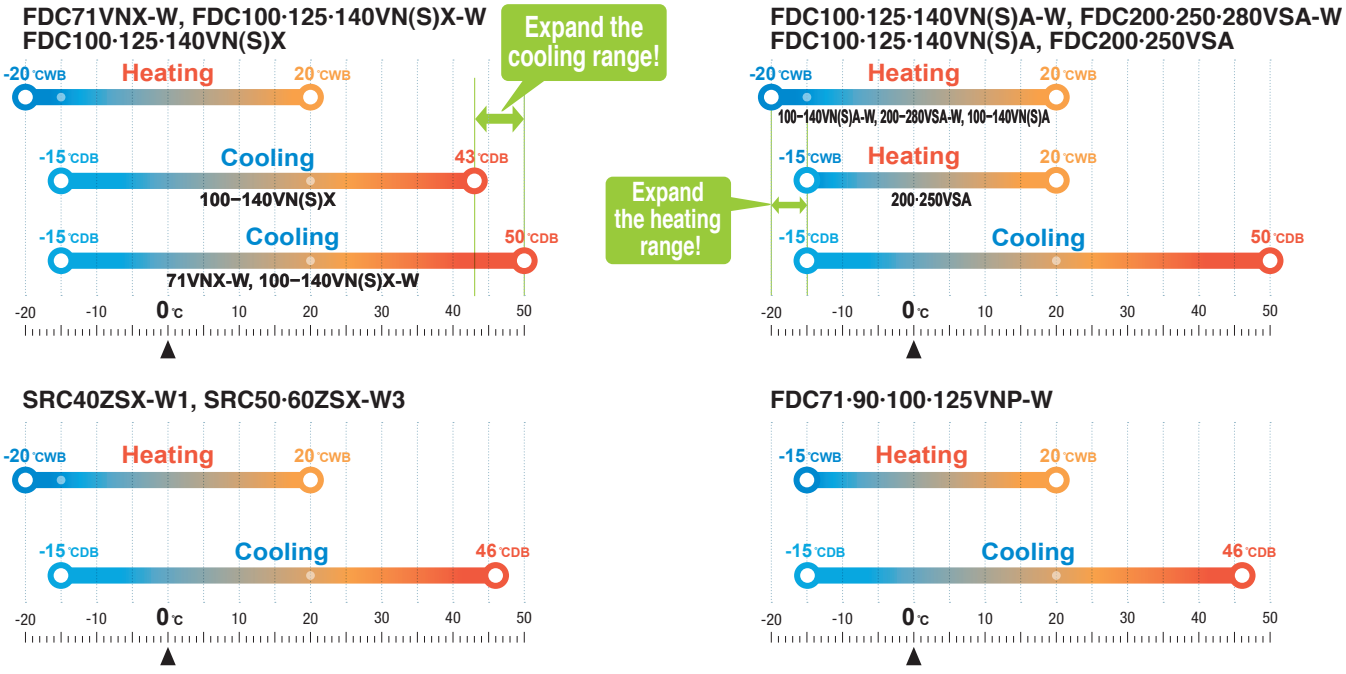

Silent Mode Operation

Hyper / Micro Inverter

Improved “silent mode” is possible, in two steps.

※ Applied on 4–6HP, 8–12HP(R32)

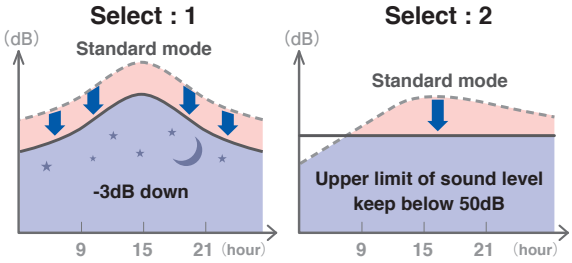

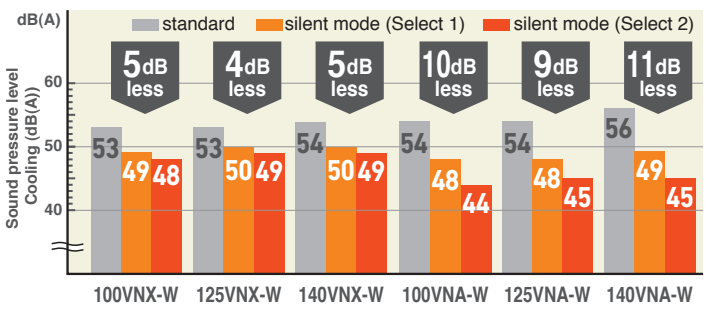

Installation Workability

Enhanced installation workability thanks to the extended pipe length – longest level in the industry and precharged refrigerant.

Long piping (in case of Hyper Inverter 4–6HP (R32))

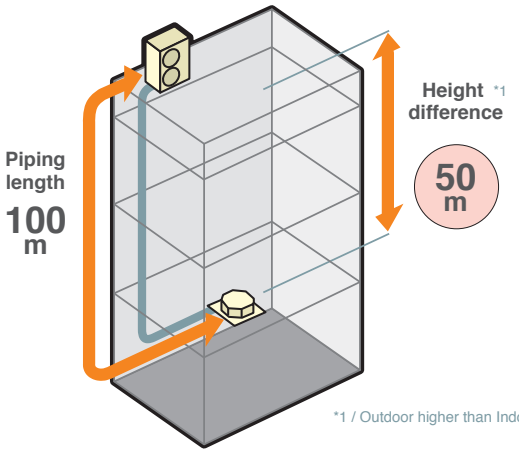

Wider variation of installation!

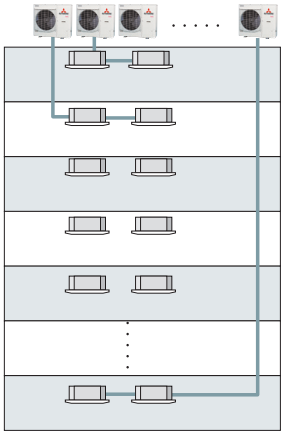

Hyper Inverter

HP	Piping length	Height difference
1.5 – 2.5	30m	20m
3	50m	30m
4–6(R32)	100m	50m
4–6(R410A)	100m	30m

Micro Inverter

HP	Piping length	Height difference
4 – 6	50m	50m*2
8–10(R32)	70m	50m*3
8·10(R410A)	70m	30m
12	60m	50m*3

Standard Inverter

HP	Piping length	Height difference
3 ~ 5	30m	20m

Refrigerant precharged piping length extending to 30m

Refrigerant precharged piping length extends up to 30m*. This eliminates the need to add refrigerant on site, which sets it free from trouble of excessive or insufficient charging of refrigerant, and allows carrying out the installation smoothly. * Hyper inverter 1.5–2.5HP and Standard Inverter are up to 15m.

*2 When the outdoor unit is installed at a position higher than the indoor unit by 30m or more, set SW5-2 on the control PCB to ON.
*3 In case of following conditions:Max.50m(Outdoor unit is higher & Outdoor temperature ≦ 43°C), Max.30m(Outdoor unit is higher & Outdoor temperature > 43°C)

Serviceability

Micro Inverter (8(R32)·10·12HP)

Improved freedom of piping layout

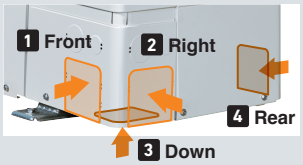

Hole size becomes 120% bigger.

Wire insertion holes for fall prevention



A transparent rain cover

Attached as a standard for easy maintenance.

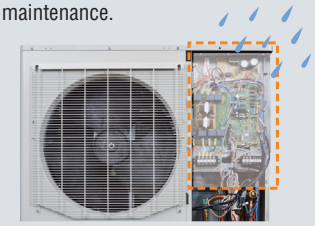

2 Layer Construction

Thanks to control box structure with 2 layer construction using hinge connection, service and maintenance has been made much easier for inverter components.



Fixing screws to service panel

Decreasing number of screws from 5 to 2, installation & service speed is improved.

Base heater kit (Option)

This kit is recommended to be used in an area where the lowest temperature drops below 0˚C.



CW-H-E1

applied for

Hyper Inverter	FDC71VNX-W	FDC71VNX
	FDC100·125·140VNX-W	FDC100·125·140VNX
	FDC100·125·140VSX-W	FDC100·125·140VSX
Micro Inverter	FDC100·125·140VNA-W	FDC100·125·140VNA
	FDC100·125·140VSA-W	FDC100·125·140VSA
	FDC200·250·280VSA-W	FDC200·250·250VSA

Monitoring Function

To your PC monitoring and service tasks made simple with our service software (“Mente PC”).

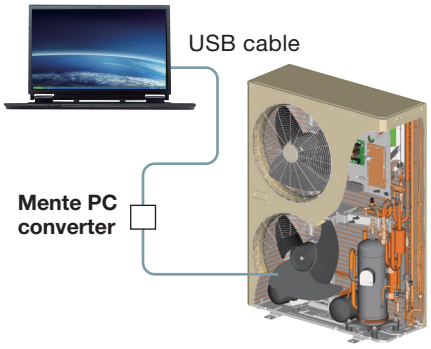

Field service with smart device

Android™ only

Monitoring and service task could now be done with a smartphone or a tablet by connecting to the Mente PC converter.

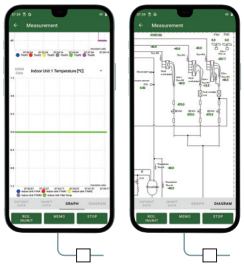

The data collected via the smart device could also be sent and viewed with our service software Mente PC.



"Android" is a trademarks or registered trademarks of Google LLC.

MULTI SYSTEM

Twin / Triple / Double Twin Multi System

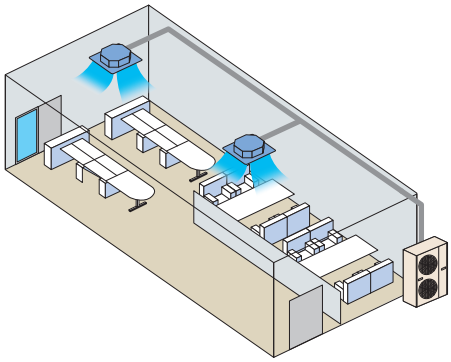

Up to four indoor units can be connected to a single outdoor unit and operated simultaneously with a single remote control.
By referring to the following table for applicable indoor units, select the same models and capacities.

Combination of indoor units

Outdoor Unit		Hyper Inverter				Micro Inverter						
FDC	R32	71VNX-W	100VNX-W 100VSX-W	125VNX-W 125VSX-W	140VNX-W 140VSX-W	100VNA-W 100VSA-W	125VNA-W 125VSA-W	140VNA-W 140VSA-W	–	200VSA-W	250VSA-W	280VSA-W
	R410A	–	100VNX 100VSX	125VNX 125VSX	140VNX 140VSX	100VNA 100VSA	125VNA 125VSA	140VNA 140VSA	200VSA	–	250VSA	–
Twin		40 + 40	50 + 50	60 + 60	71 + 71	50 + 50	60 + 60	71 + 71	100 + 100	100 + 100	125 + 125	140 + 140
Triple					50 + 50 + 50			50 + 50 + 50	71 + 71 + 71	71 + 71 + 71		
Double Twin									50+50+50+50	50+50+50+50	60+60+60+60	71+71+71+71

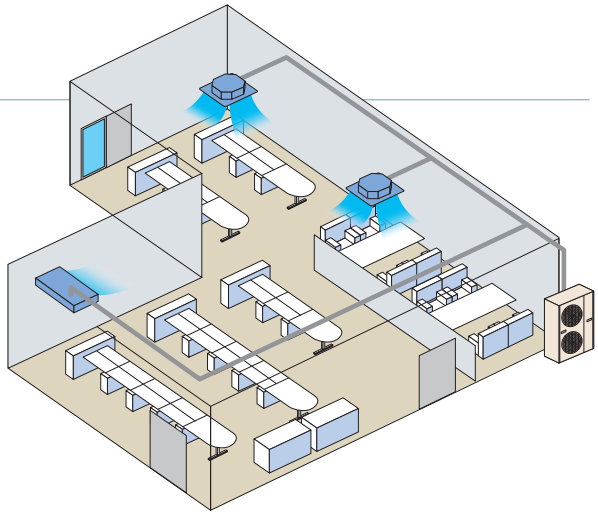

V Multi System

Ideal for the installation in large areas and L-shaped rooms, the V Multi System has an extensive degree of flexibility in the selection of indoor units. Specifically, the selection of indoor units with different capacities in different types can be made.

Combination of indoor units

Outdoor Unit		Hyper Inverter				Micro Inverter						
FDC	R32	71VNX-W	100VNX-W 100VSX-W	125VNX-W 125VSX-W	140VNX-W 140VSX-W	100VNA-W 100VSA-W	125VNA-W 125VSA-W	140VNA-W 140VSA-W	–	200VSA-W	250VSA-W	280VSA-W
	R410A	–	100VNX 100VSX	125VNX 125VSX	140VNX 140VSX	100VNA 100VSA	125VNA 125VSA	140VNA 140VSA	200VSA	–	250VSA	–
Twin		40 + 40	50 + 50	60 + 60 50 + 71	71 + 71	50 + 50	60 + 60 50 + 71	71 + 71	100 + 100 71 + 125	100 + 100 71 + 125	125 + 125	140 + 140
Triple					50 + 50 + 50			50 + 50 + 50	71 + 71 + 71	71 + 71 + 71	60+60+125 71+71+100	71+71+140
Double Twin									50+50+50+50	50+50+50+50	60+60+60+60	71+71+71+71

Applicable indoor units

Model		Capacity						
		40	50	60	71	100	125	140
Twin / Triple Double Twin Multi System	FDT	●	●	●	●	●	●	●
	FDTC	●	●	●				
	FDUM	●	●	●	●	●	●	●
	SRK		●*1	●*1	●*2	●		

Model		Capacity						
		40	50	60	71	100	125	140
Twin / Triple Double Twin Multi System	FDE	●	●	●	●	●	●	●
	FDF				●	●	●	●
V Multi System	FDT	●	●	●	●	●	●	●
	FDE	●	●	●	●	●	●	●

★ 1 Hyper Inverter model & Micro Inverter -W model only.
★ 2 Micro Inverter -W model combination only.

Choice of piping specification

Diagrams below show the application as samples. For further information, refer to TECHNICAL MANUAL.

Twin type

Models FDC71, FDC100–140, FDC200, FDC250, FDC280
[Branch pipe set : DIS-WA1G, DIS-WB1G]

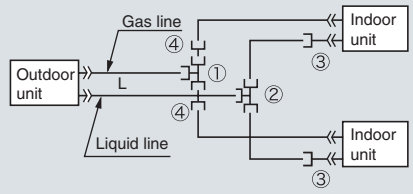

Triple type

Model FDC140, FDC200
[Branch pipe set : DIS-TA1G, DIS-TB1G]

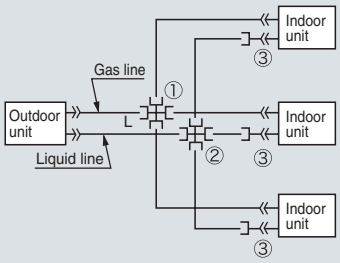

The indoor - outdoor piping length differences among indoor units are less than 3m.

Chart of shapes of branch piping parts

Branching pipe set type	Outdoor unit	Indoor unit combinations	Symbol: Branching pipe set for a gas pipe	Symbol: Branching pipe set for a liquid pipe	Symbol: Different diameter pipe joint
DIS-WA1G (Two-way branching set)	FDC71	40+40	① ID15.88 — 1 piece — ID15.88 / ID15.88	② ID9.52 — 1 piece — ID9.52 / ID9.52	③ Joint A: ID9.52 — 2 pieces Flare Joint (for indoor unit side connection); ④ Joint B: OD15.88 — 2 pieces ID12.7
	FDC100	50+50			
		40+60			
	FDC125	60+60			
		50+71			
	FDC140	71+71			
		50+100			
DIS-WB1G (Two-way branching set)	FDC200	100+100	① ID15.88 — 1 piece — ID25.4 / ID15.88	② ID9.52 — 1 piece — ID12.7 / ID9.52	④ Joint C: OD12.7 — 1 piece ID9.52
		71+125			
	FDC250 FDC280	125+125 140+140			
DIS-TA1G (Three-way branching set)	FDC140	50+50+50	① ID12.7 — 1 piece — ID15.88	② ID9.52 — 1 piece — ID9.52	③ Joint A: ID9.52 — 3 pieces Flare Joint (for indoor unit side connection)
DIS-TB1G (Three-way branching set)	FDC200	71+71+71	① ID15.88 — 1 piece — ID25.4	② ID9.52 — 1 piece — ID9.52	③ Joint A: ID9.52 — 2 pieces Flare joint(for indoor unit side connection); Joint B: OD15.88 — 1 piece ID12.7; Joint D: ID12.7 — 1 piece OD9.52

Symbol ① to ④ in the drawing shows the symbols of branch piping parts in the chart respectively.

Branch piping should always be arranged to have level or perpendicular position.

Notes

(1)When 40-60 models of indoor units are applied to this combination, the reducer③ supplied with the branch piping set should be used in order to reduce the liquid piping size from ø9.52mm to ø6.35mm at indoor unit side (flare connection). Accordingly be sure to select the liquid piping size ø9.52mm from branch to indoor unit.
(2)The reducer④ is for FDC71 and 100 models only.

ID stands for inner diameter and OD, outer diameter.

The branch piping (both gas and liquid lines) should always be arranged to have a level or perpendicular position.

2-Way Branch

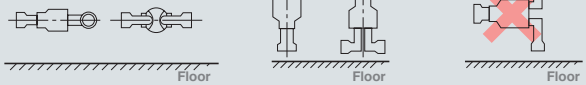

Mount —·— sections level with the floor.

Mount —·— sections perpendicular to the floor.

3-Way Branch

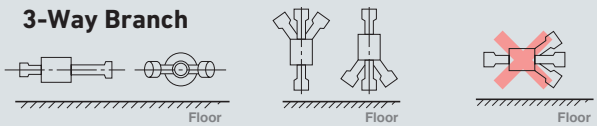

Indoor units

BENEFITS SUMMARY

			FDT	FDTC	FDU	FDUM	SRK	FDE	FDF
Energy-Saving		**Inverter Technology** Inverter control technology delivers high efficiency and a smooth operation from high speed to low speed. A smooth sine voltage wave is attained.	●	●	●	●	●	●	●
		Energy-Saving Operation * Since the capacity is controlled automatically based on the outdoor temperature, energy can be saved without losing comfort.	●	●	●	●	●	●	●
		Motion Sensor * This sensor detects human activity and shifts the temperature setting according to the amount of activity in the room.	● Option	● Option	● Option	● Option		● Option	● Option
		Home Leave Operation This function ensures that when the room is unoccupied for long periods of time, the unit will maintain a moderate indoor temperature, avoiding extremely hot or cool temperatures.	●	●	●	●	●	●	●
		Set Temperature Auto Return * This function allows the user to program a preferred set temperature that the unit will return to each time it is operated.	●	●	●	●	●	●	●
Comfort		**Automatic Operation** This function automatically selects the required heating or cooling function based on the current room conditions.	●	●	●	●	●	●	●
		Silent Operation This function allows the user to program periods where the unit will operate with reduced noise levels, perfect for night time and an uninterrupted sleep.	●	●	●	●	●	●	●
		Hi Power Operation Use the high power function to quickly reach your optimum temperature level when you first turn on the unit. This function will operate for a maximum of 15 minutes before returning to normal operation.	●	●	●	●	●	●	●
Air Flow		**Flap Control System** This function allows the user to set the upper and lower limit positions of the flap at each air outlet individually, providing you with complete control over interior air flow.	●	●			●	●	
		Auto Swing The louvers on your unit will move up and down continuously during operation. This function allows you to set the up/down swing position of the louver to the preferred operation angle.	●	●			●	●	●
		Draft Prevention Setting * Draft Prevention setting provides a comfortable air flow without any draft feeling. Whether cooling or heating a room, the remote control can be used to instantly suppress any warm or cool drafts. This accurately assists how air flow is directed out of the indoor unit.	● Option	● Option					
		Automatic Fan Speed The unit's on-board microcomputer continuously monitors the room's air temperature and adjusts the air flow automatically.	●	●	●	●	●	●	●

When using RC-EX3D (Remote control), functions with symbol ●●●●●● are available.
However, for RC-E5 (Remote control), functions with * are not available.

FDT	FDTC	FDU	FDUM	SRK	FDE	FDF
						
P22	P38	P46	P56	P70	P78	P92

			FDT	FDTC	FDU	FDUM	SRK	FDE	FDF
Timer		**Sleep Timer** This function allows the user to set a pre-determined amount of time between 30 and 240 minutes that your unit will operate for before switching off.	●	●	●	●	●	●	●
		Peak-Cut Timer * This function lets the user to preset the capacity limit during certain periods of the day, minimising energy consumption during peak billing times, thus reducing operation costs.	●	●	●	●	●	●	●
		Weekly Timer Set the unit to turn on and off automatically on a weekly basis to suit your usual room usage on each day.	●	●	●	●	●	●	●
Convenience		**Function Switch *** From the seven available functions on the unit, this function allows the user to set two functions to operate automatically.	●	●	●	●	●	●	●
		Favourite Setting * Operation mode, set temperature, fan speed and air flow direction automatically adjust to the programmed favourite setting.	●	●	●	●	●	●	●
		Select the Language * Set the language to be displayed on the remote control.	●	●	●	●	●	●	●
		Air Filter The air filter in the unit traps and removes airborne dust particles and other allergens to provide you clean air.	●	●	Procure locally	● Option	●	●	●
		Filter Sign This warning alerts when the filter needs to be cleaned.	●	●	●	●	●	●	●
		Outside Air Intake This function provides clean fresh air into the room through the external air intake, avoiding the constant recycling of internal air.	●	●	●	●			
Others		**Self Diagnostics** The internal microcomputer automatically runs a diagnostic of the system in the event of a malfunction. This enables authorised dealers to isolate and repair any issues.	●	●	●	●	●	●	●
		Built in Drain Pump The built-in drain pump, allows greater flexibility with installation, offering a great solution for applications with limited space.	●	●	● *1	●			
		Improved Serviceability The fan unit (comprised of impeller and motor) is easily accessible from either the side or bottom of the unit and can be slid out for easy maintenance.			●	●			

*1 : Except 200 • 250 • 280

FDT

Intdoor Unit

Ceiling Cassette -4way-



FDT 40/50/60/71/100/125/140

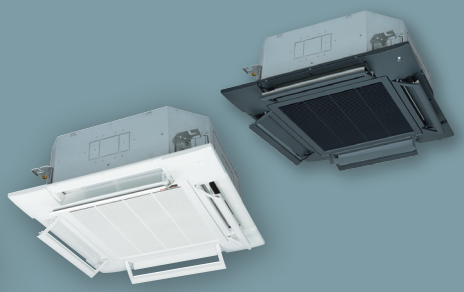

Draft Prevention Panel (Option)



Energy Saving

Home Leave

Hi Power

Silent Operation

Flap Control

Favourite Setting

R410A

R32

Hybrid

Remote control (Option)

Wired



RC-EX3D



RC-E5

New!



RC-ES1

Wireless



RCN-T-5BW-E2(White)
RCN-T-5BB-E2(Black)

*Not all functions available with all remote control options.

Draft Prevention Panel (Option)

This prevents cold/hot draft being blown directly on the user.It is possible to set Draft Prevention Panel for each air outlet.

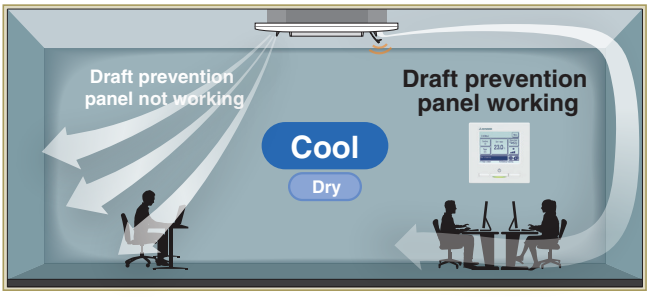

User can position panels by using the remote controller only (RC-EX3D, Wireless kit) when Draft Prevention Panel is available.

Motion Sensor (Option)

Motion sensor is equipped in the corner of the panel and detects the presence/absence and activity of humans in a room to improve the comfort and energy saving performance of the unit.



LB-T-5BW-E(White)
LB-T-5BB-E(Black)

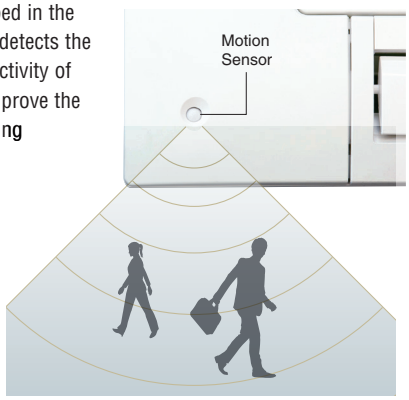

Individual Flap Control System

According to room conditions, four directions of air flow can be controlled individually by utilizing the flap control system. Individual flap control is available even after installation.

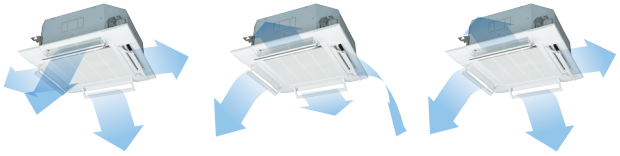

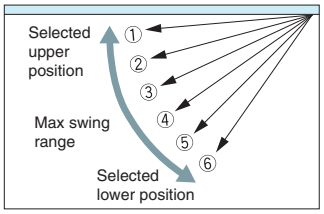

Flap can swing within an upper and lower flap range position within can be selected with a wired remote control.

* The wireless remote control is not applicable to the Individual flap control system.

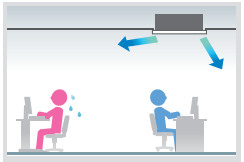

For person who is far from the indoor unit

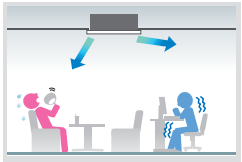

For both persons who are feeling hot or cold

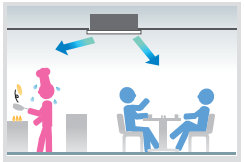

Can cool both the kitchen and the guests

Reduced Noise

New technology has achieved low noise (in cooling) while keeping capacity and comfort.

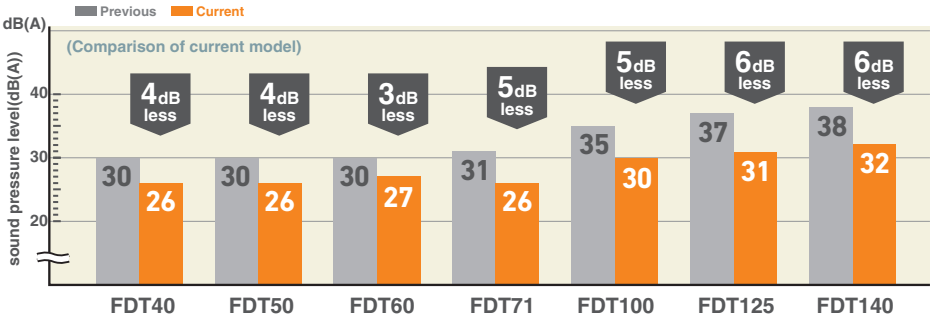

Panel Select Pattern (Option)

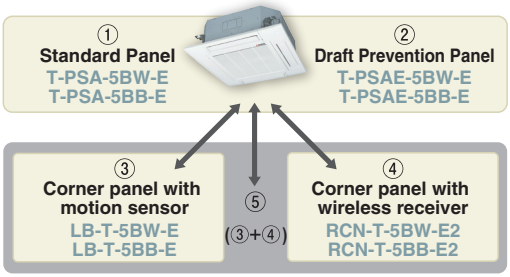

8 patterns of panel are available.

①	Standard Panel only
①+③	Standard Panel with corner panel with motion sensor
①+④	Standard Panel with corner panel with wireless receiver
①+⑤	Standard Panel with corner panel with motion sensor & corner panel with wireless receiver
②	Draft Prevention Panel only
②+③	Draft Prevention Panel with corner panel with motion sensor
②+④	Draft Prevention Panel with corner panel with wireless receiver
②+⑤	Draft Prevention Panel with corner panel with motion sensor & corner panel with wireless receiver

Installation position of Wireless kit and Motion sensor kit

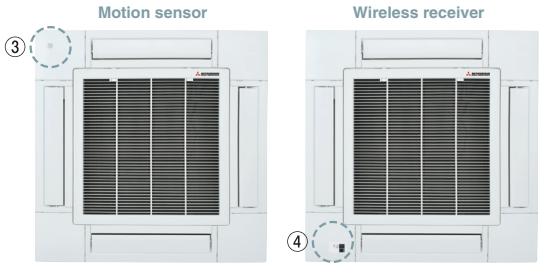

*Wireless receiver and Motion sensor can be installed to the position as shown

Suitable for High ceilings

The Powerful blowout carries comfortable air flow to the floor even in high ceiling applications. It is ideal for high ceiling offices, stores, etc., with a wide, uniform air flow throughout the room.

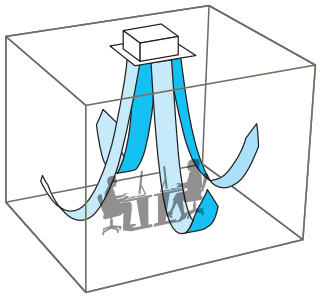

850mm Drain Pump

Drain can be discharged upward by 850mm from the ceiling surface close to the indoor unit.
It allows a piping layout with a high degree of freedom depending on the installation location.

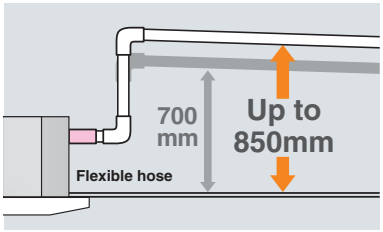

OUTDOOR UNIT

		HyperInverter		
SRC • FDC		40ZSX-W1,50•60ZSX-W3	71VNX-W	100-140VN(S)X-W
	R410A	—	—	100-140VN(S)X
model				
Chargeless		15m	30m	
Height x Width x Depth (mm)		640 x 800(+71) x 290	750 x 880(+88) x 340	1300 x 970 x 370

		Micro Inverter			Standard Inverter		
FDC		100-140VN(S)A-W	—	200•250•280VSA-W	71VNP-W	90•100VNP-W	125VNP-W
	R410A	100-140VN(S)A	200VSA	250VSA	—	—	—
model							
Chargeless		30m			15m		
Height x Width x Depth (mm)		845 x 970 x 370	1300 x 970 x 370	1505 x 970 x 370	640 x 800(+71) x 290	750 x 880(+88) x 340	845 x 970 x 370

Easy and quick installation and maintenance

Serviceability & Workability

Quick positioning !

Indoor unit is easily positioned and installed

1 Adjustable easier positioning of unit by new slits.

FDT

New shape of slit is suitable to install the unit with more flexibility, compatible with many kinds of suspending bolt pitch on site.
Any rectangular or squared pitch of suspending bolts are available with this slit.

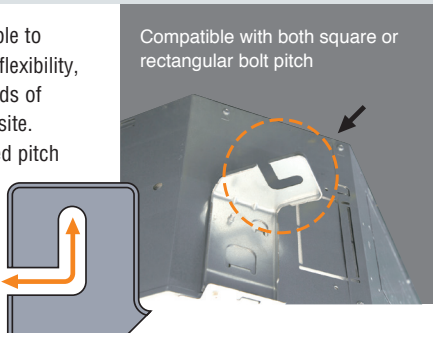

2 New slit in panel allows easier installation on site.

FDT
FDTC

Flexible positioning is available, which helps adjusting the direction of panel accordingly to lines or pattern on the ceiling.

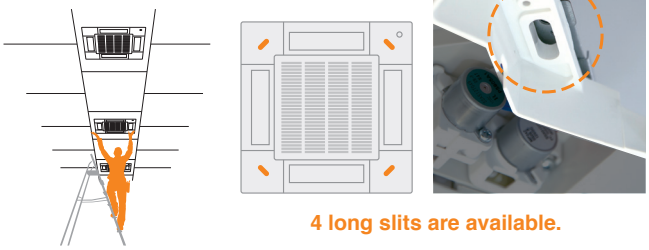

4 long slits are available.

Quick installation and maintenance

1 Easy access to component part for easy maintenance.

FDT

1. The control box and bell mouth can be removed together.
2. Easy access to impeller and fan motor.

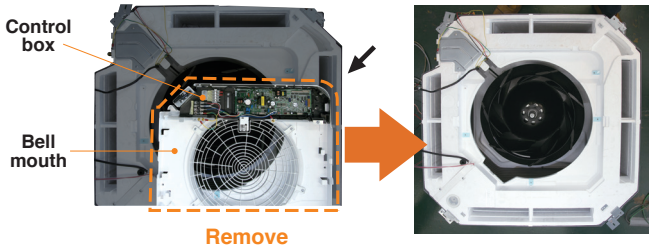

Remove

2 New shape of path of wiring.

FDT

New shape of path gives easy wiring work for installation.

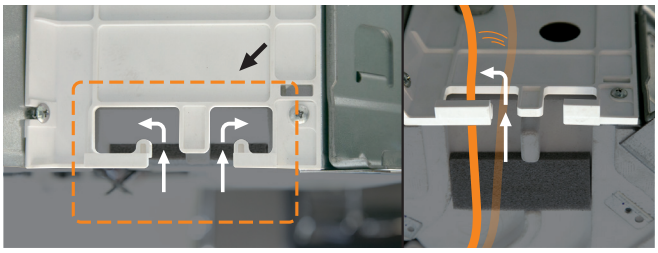

Easy wiring work

3 No need to remove screws to open the controller cover.

FDT

It is possible to loose and slide open the cover without removing the screws. This prevents the cover from falling and causing damage on site.

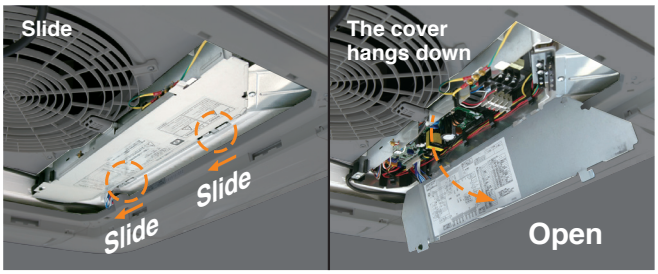

No need to remove screws



4 Safer installation by stopper of washer

FDT
FDTC

When unit is installed with hook between washers, this stopper helps to install the unit safely, without adjusting washer.

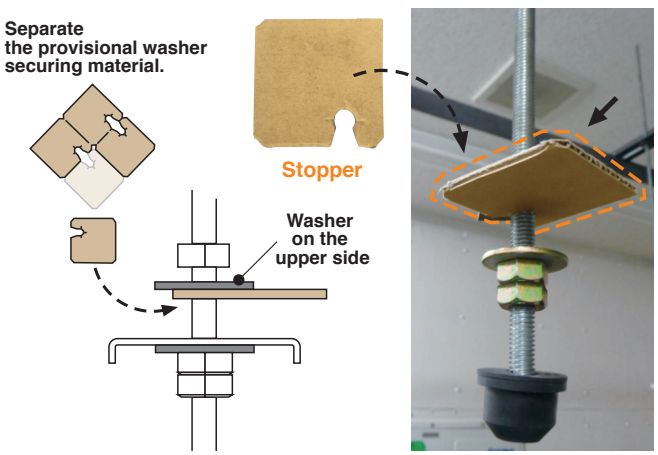



For smooth and easy working

Good help for installation and maintenance

1 Easy and flexible hook to remove the filter

FDT FDTC

Hook of soft material helps to remove the filter without dust spreading.

Press the filter tab to the outside and remove the filter.

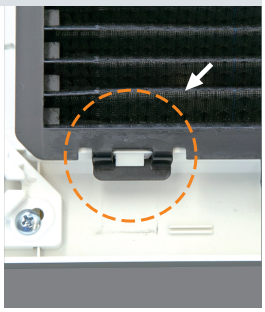

Soft material

2 Securely fix the corner lid by strap

FDT

The direction of the strap hook part has been changed from longitudinal to lateral. Furthermore, a barb has been added to the hook pin to prevent the strap from coming off.

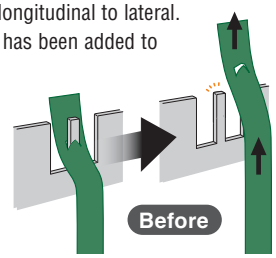



3 Drain-up-lift increases up to 850 mm

FDT FDTC

The drain can be lifted up to 850 mm from the ceiling surface.

	Previous	New
FDT	700	850
FDTC	600	850

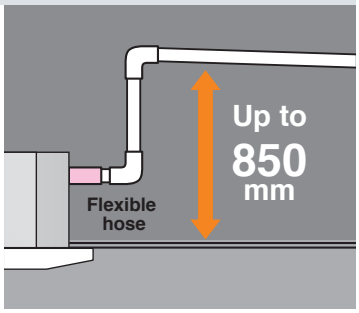

4 New port to check drain water flow

FDT

A water supply port has been provided in the piping lid for easier testing of the drain water flow.
(The port is usually sealed with a rubber cap.)

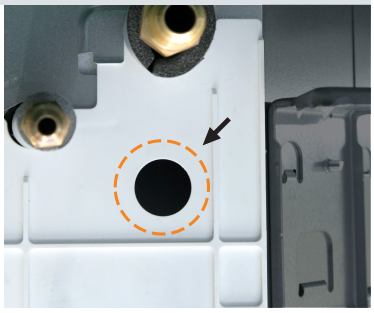

5 Re-use of packages during construction work

FDT FDTC

Package material (carton) helps to protect the unit from unexpected welding spatter or dust on the new unit.

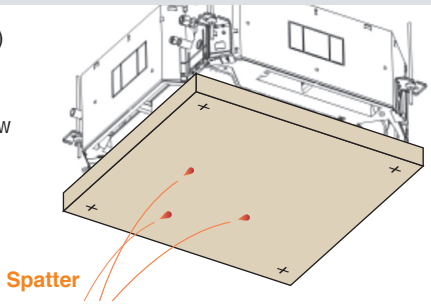

6 More flexible outlet for ducting

FDT FDTC

Both ϕ125 and ϕ200 (oval shaped) are available.

ϕ125 ϕ200

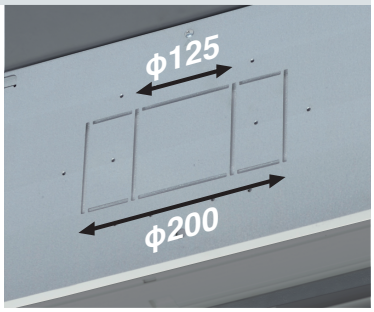

7 Easy check of drain pan

FDT FDTC

Easy inspection of the condition of the drain pan is possible by removing only the corner lid.



Remove corner lid. Remove drain cap cover and check the condition. It is necessary to clean-up, firstly remove the rubber stopper to drain water out and secondly remove the drain cap.

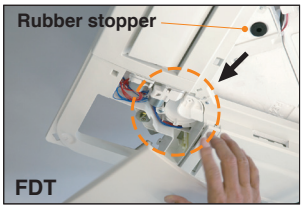

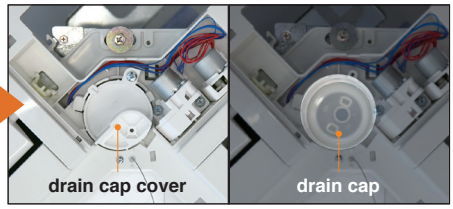

Clean up the area around the drain pump port.

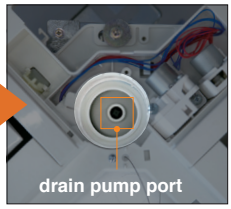

DIMENSIONS (Unit:mm) - FDT -

Models FDT40VH, 50VH, 60VH, 71VH

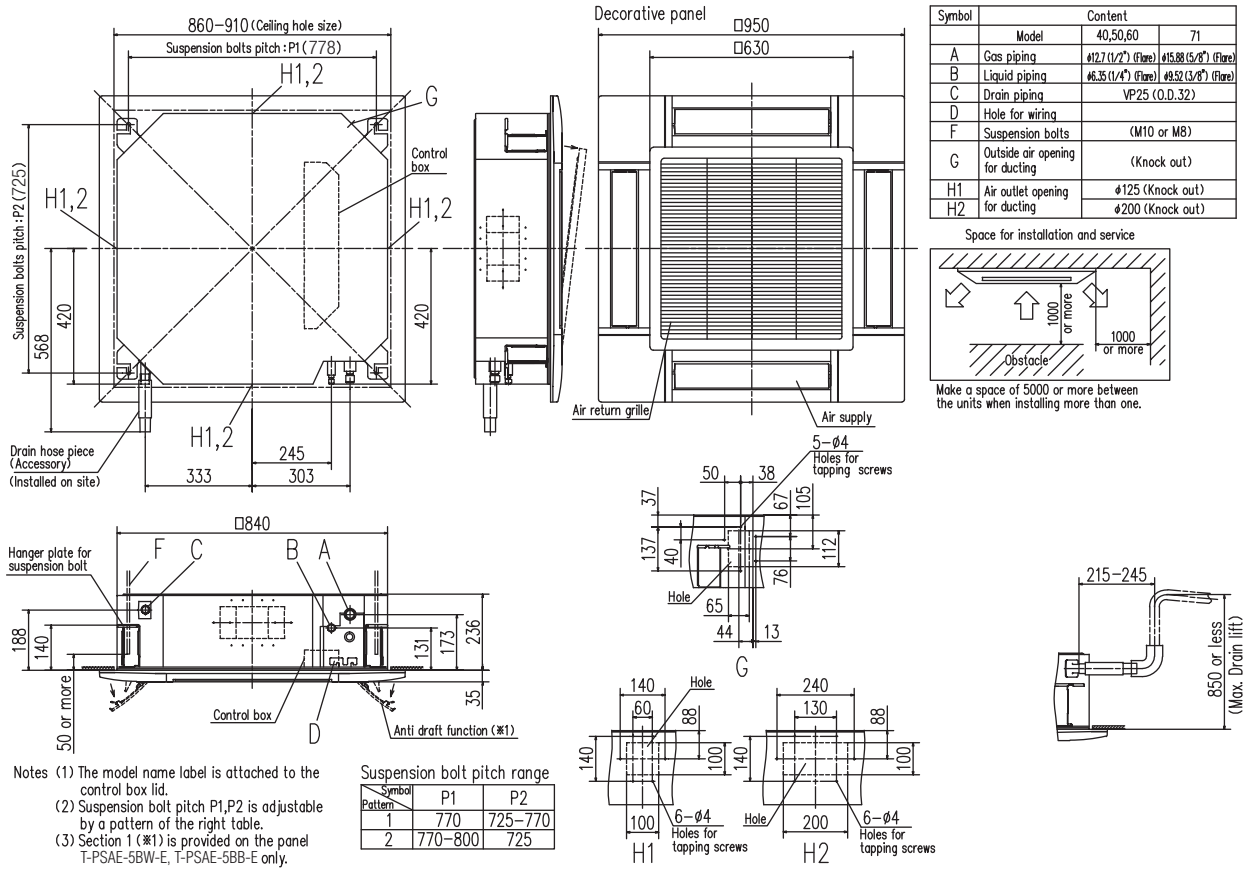

Symbol	Content		
	Model	40,50,60	71
A	Gas piping	ϕ12.7 (1/2") (Flare)	ϕ15.88 (5/8") (Flare)
B	Liquid piping	ϕ6.35 (1/4") (Flare)	ϕ9.52 (3/8") (Flare)
C	Drain piping	VP25 (O.D.32)	
D	Hole for wiring		
F	Suspension bolts	(M10 or M8)	
G	Outside air opening for ducting	(Knock out)	
H1	Air outlet opening for ducting	ϕ125 (Knock out)	
H2		ϕ200 (Knock out)	

Notes (1) The model name label is attached to the control box lid.
(2) Suspension bolt pitch P1,P2 is adjustable by a pattern of the right table.
(3) Section 1 (※1) is provided on the panel T-PSAE-5BW-E, T-PSAE-5BB-E only.

Suspension bolt pitch range

Symbol / Pattern	P1	P2
1	770	725–770
2	770–800	725

Models FDT100VH, 125VH, 140VH

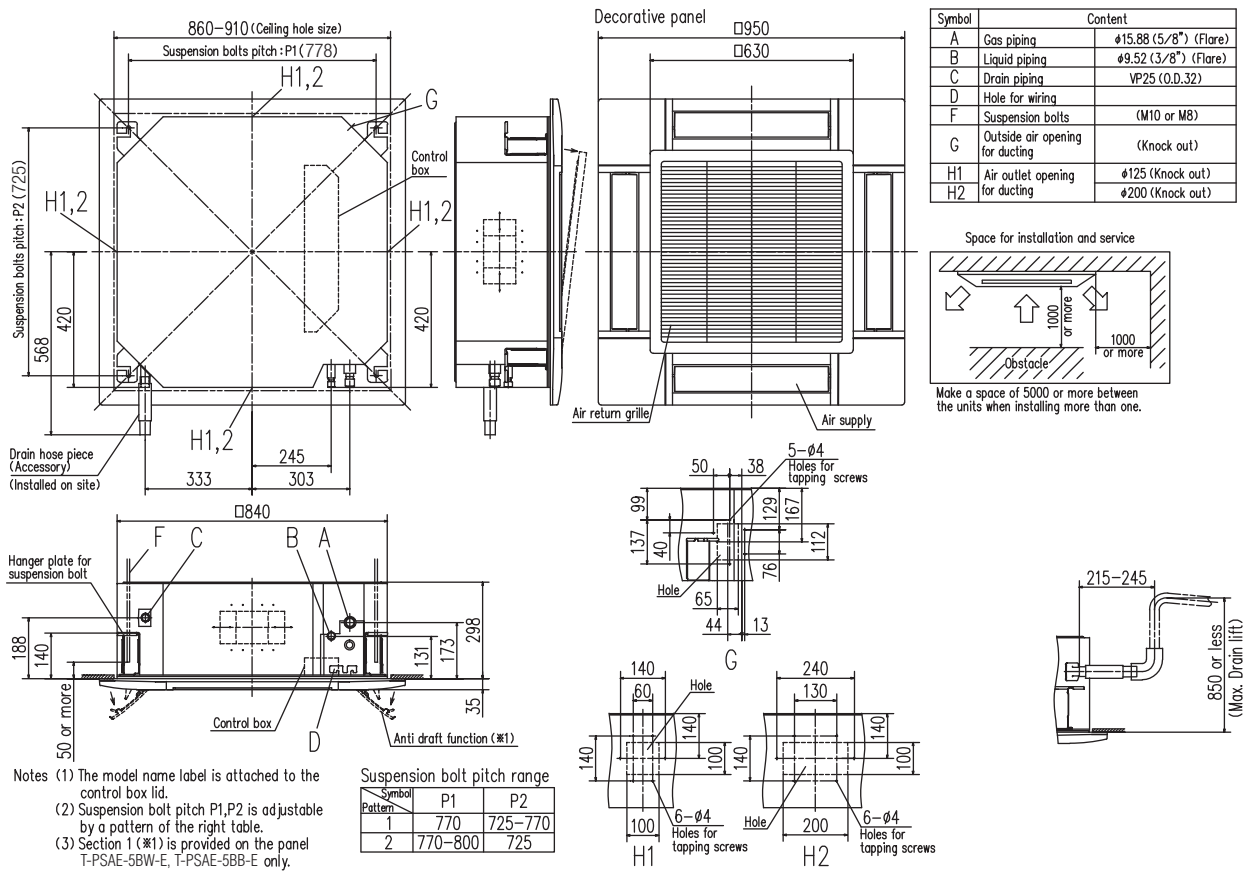

Symbol	Content	
A	Gas piping	ϕ15.88 (5/8") (Flare)
B	Liquid piping	ϕ9.52 (3/8") (Flare)
C	Drain piping	VP25 (O.D.32)
D	Hole for wiring	
F	Suspension bolts	(M10 or M8)
G	Outside air opening for ducting	(Knock out)
H1	Air outlet opening for ducting	ϕ125 (Knock out)
H2		ϕ200 (Knock out)

Notes (1) The model name label is attached to the control box lid.
(2) Suspension bolt pitch P1,P2 is adjustable by a pattern of the right table.
(3) Section 1 (※1) is provided on the panel T-PSAE-5BW-E, T-PSAE-5BB-E only.

Suspension bolt pitch range

Symbol / Pattern	P1	P2
1	770	725–770
2	770–800	725

SPECIFICATIONS -FDT-

R32				Hyper Inverter			
Set model name				FDT40ZSXW1VH	FDT50ZSXW3VH	FDT60ZSXW3VH	FDT71VNXWVH
Indoor unit				FDT40VH	FDT50VH	FDT60VH	FDT71VH
Outdoor unit				SRC40ZSX-W1	SRC50ZSX-W3	SRC60ZSX-W3	FDC71VNX-W
Power source				1 Phase 220-240V, 50Hz / 220V, 60Hz			
Nominal cooling capacity (Min - Max)			kW	4.0 (1.1 - 4.7)	5.0 (1.1 - 5.6)	5.6 (1.1 - 6.3)	7.1 (3.2 - 8.0)
Nominal heating capacity (Min - Max)			kW	4.5 (0.6 - 5.4)	5.4 (0.6 - 6.3)	6.7 (0.6 - 6.7)	8.0 (3.6 - 9.0)
Power consumption		Cooling/Heating	kW	0.890 / 1.03	1.29 / 1.31	1.33 / 1.56	1.69 / 1.75
EER/COP		Cooling/Heating		4.49 / 4.37	3.88 / 4.12	4.21 / 4.29	4.20 / 4.58
Inrush current			A	5	5	5	5
Max. current				15	15	15	19.1
Sound power level*1	Indoor	Cooling/Heating	dB(A)	50 / 50	55 / 56	58 / 59	59 / 60
	Outdoor	Cooling/Heating		63 / 62	63 / 62	65 / 65	66 / 66
Sound pressure level*1	Indoor	Cooling (P-Hi/Hi/Me/Lo)		36 / 33 / 30 / 26	41 / 33 / 30 / 26	44 / 34 / 30 / 27	46 / 34 / 31 / 26
		Heating (P-Hi/Hi/Me/Lo)		36 / 33 / 28 / 20	42 / 33 / 28 / 20	44 / 34 / 30 / 23	46 / 34 / 31 / 26
	Outdoor	Cooling/Heating		52 / 50	52 / 50	53 / 54	51 / 51
Air flow	Indoor	Cooling (P-Hi/Hi/Me/Lo)	m³/min	19 / 16 / 13 / 10	22 / 16 / 13 / 10	26 / 17 / 14 / 11	28 / 18 / 15 / 12
		Heating (P-Hi/Hi/Me/Lo)		19 / 16 / 13 / 10	22 / 16 / 13 / 10	26 / 17 / 14 / 11	28 / 18 / 15 / 12
	Outdoor	Cooling/Heating		33 / 33	39 / 33	41.5 / 39	60 / 50
Exterior dimensions	Indoor	HeightxWidthxDepth	mm	Unit: 236 x 840 x 840 Panel: 35 x 950 x 950			
	Outdoor			640 x 800(+71) x 290			750 x 880(+88) x 340
Net weight	Indoor		kg	24(Unit:19 Standard Panel:5)		26(Unit:21 Standard Panel:5)	
	Outdoor			45			60
Ref.piping size	Liquid/Gas		ømm	6.35(1/4") / 12.7(1/2")			9.52(3/8") / 15.88(5/8")
Refrigerant line (one way) length			m	Max.30			Max.50
Vertical height differences		Outdoor is higher/lower	m	Max.20 / Max.20			Max.30 / Max.15
Outdoor operating temperature range		Cooling	°CDB	-15 to 46*2			-15 to 50*2
		Heating	°CWB	-20 to 20			
Panel				T-PSA-5BW-E, T-PSAE-5BW-E(White) / T-PSA-5BB-E, T-PSAE-5BB-E(Black)			
Air filter, Q'ty				Pocket plastic net x 1(Washable)			
Remote control (option)				Wired:RC-EX3D, RC-E5, RC-ES1 Wireless:RCN-T-5BW-E2, RCN-T-5BB-E2			

R32				Hyper Inverter		
Set model name				FDT100VNXWVH	FDT125VNXWVH	FDT140VNXWVH
Indoor unit				FDT100VH	FDT125VH	FDT140VH
Outdoor unit				FDC100VNX-W	FDC125VNX-W	FDC140VNX-W
Power source				1 Phase 220-240V, 50Hz / 220V, 60Hz		
Nominal cooling capacity (Min - Max)			kW	10.0 (3.5 - 11.2)	12.5 (3.5 - 14.0)	14.0 (3.5 - 16.0)
Nominal heating capacity (Min - Max)			kW	11.2 (2.7 - 12.5)	14.0 (2.7 - 17.0)	16.0 (2.7 - 18.0)
Power consumption		Cooling/Heating	kW	2.28 / 2.48	3.21 / 3.43	3.87 / 4.20
EER/COP		Cooling/Heating		4.38 / 4.52	3.89 / 4.08	3.62 / 3.81
Inrush current			A	5	5	5
Max. current				25	27	27
Sound power level*1	Indoor	Cooling/Heating	dB(A)	62 / 62	63 / 64	63 / 64
	Outdoor	Cooling/Heating		67 / 67	68 / 70	69 / 71
Sound pressure level*1	Indoor	Cooling (P-Hi/Hi/Me/Lo)		47 / 39 / 36 / 30	48 / 41 / 39 / 31	48 / 42 / 39 / 32
		Heating (P-Hi/Hi/Me/Lo)		47 / 39 / 36 / 29	48 / 41 / 38 / 31	48 / 41 / 38 / 31
	Outdoor	Cooling/Heating		53 / 51	53 / 54	54 / 54
Air flow	Indoor	Cooling (P-Hi/Hi/Me/Lo)	m³/min	37 / 26 / 23 / 17	38 / 28 / 25 / 18	38 / 29 / 26 / 19
		Heating (P-Hi/Hi/Me/Lo)		37 / 26 / 23 / 17	38 / 28 / 25 / 18	38 / 29 / 26 / 19
	Outdoor	Cooling/Heating		100 / 100	100 / 100	100 / 100
Exterior dimensions	Indoor	HeightxWidthxDepth	mm	Unit: 298 x 840 x 840 Panel: 35 x 950 x 950		
	Outdoor			1300 x 970 x 370		
Net weight	Indoor		kg	30(Unit:25 Standard Panel:5)		
	Outdoor			97		
Ref.piping size	Liquid/Gas		ømm	9.52(3/8") / 15.88(5/8")		
Refrigerant line (one way) length			m	Max.100		
Vertical height differences		Outdoor is higher/lower	m	Max.50 / Max.15		
Outdoor operating temperature range		Cooling	°CDB	-15 to 50*2		
		Heating	°CWB	-20 to 20		
Panel				T-PSA-5BW-E, T-PSAE-5BW-E(White) / T-PSA-5BB-E, T-PSAE-5BB-E(Black)		
Air filter, Q'ty				Pocket plastic net x 1(Washable)		
Remote control (option)				Wired:RC-EX3D, RC-E5, RC-ES1 Wireless:RCN-T-5BW-E2, RCN-T-5BB-E2		

NOTES:

The data are measured under the following conditions(ISO-T1, -H1).
Cooling:Indoor temp. of 27°CDB, 19°CWB, and outdoor temp. of 35°CDB. Heating:Indoor temp. of 20°CDB, and outdoor temp. of 7°CDB, 6°CWB.
*1 : Indicates the value in an anechoic chamber. During operation these values are somewhat higher due to ambient conditions.
*2 : If a cooling operation is conducted when the outdoor air temperature is –5°C or lower, the outdoor unit should be installed at a place where it is not influenced by natural wind. If wind blows, the low pressure will drop and compressor frequency will increase, this will cause the capacity to drop and may cause the unit to break down.

SPECIFICATIONS -FDT-

R32				Hyper Inverter		
Set model name				FDT100VSXWVH	FDT125VSXWVH	FDT140VSXWVH
Indoor unit				FDT100VH	FDT125VH	FDT140VH
Outdoor unit				FDC100VSX-W	FDC125VSX-W	FDC140VSX-W
Power source				3 Phase 380-415V, 50Hz / 380V, 60Hz		
Nominal cooling capacity (Min - Max)			kW	10.0 (3.5 - 11.2)	12.5 (3.5 - 14.0)	14.0 (3.5 - 16.0)
Nominal heating capacity (Min - Max)			kW	11.2 (2.7 - 16.0)	14.0 (2.7 - 18.0)	16.0 (2.7 - 20.0)
Power consumption		Cooling/Heating	kW	2.28 / 2.48	3.21 / 3.43	3.87 / 4.20
EER/COP		Cooling/Heating		4.38 / 4.52	3.89 / 4.08	3.62 / 3.81
Inrush current			A	5	5	5
Max. current				14	14	14
Sound power level*1	Indoor	Cooling/Heating	dB(A)	62 / 62	63 / 64	63 / 64
	Outdoor	Cooling/Heating		67 / 67	68 / 70	69 / 71
Sound pressure level*1	Indoor	Cooling (P-Hi/Hi/Me/Lo)		47 / 39 / 36 / 30	48 / 41 / 39 / 31	48 / 42 / 39 / 32
		Heating (P-Hi/Hi/Me/Lo)		47 / 39 / 36 / 29	48 / 41 / 38 / 31	48 / 41 / 38 / 31
	Outdoor	Cooling/Heating		53 / 51	53 / 54	54 / 54
Air flow	Indoor	Cooling (P-Hi/Hi/Me/Lo)	m^3/min	37 / 26 / 23 / 17	38 / 28 / 25 / 18	38 / 29 / 26 / 19
		Heating (P-Hi/Hi/Me/Lo)		37 / 26 / 23 / 17	38 / 28 / 25 / 18	38 / 29 / 26 / 19
	Outdoor	Cooling/Heating		100 / 100	100 / 100	100 / 100
Exterior dimensions	Indoor	HeightxWidthxDepth	mm	Unit: 298 x 840 x 840 Panel: 35 x 950 x 950		
	Outdoor			1300 x 970 x 370		
Net weight	Indoor		kg	30(Unit:25 Standard Panel:5)		
	Outdoor			99		
Ref.piping size	Liquid/Gas		ømm	9.52(3/8") / 15.88(5/8")		
Refrigerant line (one way) length			m	Max.100		
Vertical height differences		Outdoor is higher/lower	m	Max.50 / Max.15		
Outdoor operating temperature range		Cooling	°CDB	-15 to 50*2		
		Heating	°CWB	-20 to 20		
Panel				T-PSA-5BW-E, T-PSAE-5BW-E(White) / T-PSA-5BB-E, T-PSAE-5BB-E(Black)		
Air filter, Q'ty				Pocket plastic net x 1(Washable)		
Remote control (option)				Wired:RC-EX3D, RC-E5, RC-ES1 Wireless:RCN-T-5BW-E2, RCN-T-5BB-E2		

The values are for simultaneous Multi operation.

R32				Hyper Inverter				
Set model name				FDT71VNXWPVH	FDT100VNXWPVH	FDT125VNXWPVH	FDT140VNXWPVH	FDT140VNXWTVH
				Twin				Triple
Indoor unit				FDT40VH x 2	FDT50VH x 2	FDT60VH x 2	FDT71VH x 2	FDT50VH x 3
Outdoor unit				FDC71VNX-W	FDC100VNX-W	FDC125VNX-W	FDC140VNX-W	FDC140VNX-W
Power source				1 Phase 220-240V, 50Hz / 220V, 60Hz				
Nominal cooling capacity (Min - Max)			kW	7.1 (3.2 - 8.0)	10.0 (3.5 - 11.2)	12.5 (3.5 - 14.0)	14.0 (3.5 - 16.0)	14.0 (3.5 - 16.0)
Nominal heating capacity (Min - Max)			kW	8.0 (3.6 - 9.0)	11.2 (2.7 - 12.5)	14.0 (2.7 - 17.0)	16.0 (2.7 - 18.0)	16.0 (2.7 - 18.0)
Power consumption		Cooling/Heating	kW	1.61 / 1.83	2.30 / 2.64	2.98 / 3.03	3.44 / 3.64	3.48 / 3.74
EER/COP		Cooling/Heating		4.40 / 4.38	4.35 / 4.25	4.19 / 4.62	4.07 / 4.40	4.02 / 4.28
Inrush current			A	5	5	5	5	5
Max. current				19.1	25	27	27	27
Sound power level*1	Indoor*3	Cooling/Heating	dB(A)	50 / 50	55 / 56	58 / 59	59 / 60	55 / 56
	Outdoor	Cooling/Heating		66 / 66	67 / 67	68 / 70	69 / 71	69 / 71
Sound pressure level*1	Indoor*3	Cooling (P-Hi/Hi/Me/Lo)		36 / 33 / 30 / 26	41 / 33 / 30 / 26	44 / 34 / 30 / 27	46 / 34 / 31 / 26	41 / 33 / 30 / 26
		Heating (P-Hi/Hi/Me/Lo)		36 / 33 / 28 / 20	42 / 33 / 28 / 20	44 / 34 / 30 / 23	46 / 34 / 31 / 26	42 / 33 / 28 / 20
	Outdoor	Cooling/Heating		51 / 51	53 / 51	53 / 54	54 / 54	54 / 54
Air flow	Indoor*3	Cooling (P-Hi/Hi/Me/Lo)	m^3/min	19 / 16 / 13 / 10	22 / 16 / 13 / 10	26 / 17 / 14 / 11	28 / 18 / 15 / 12	22 / 16 / 13 / 10
		Heating (P-Hi/Hi/Me/Lo)		19 / 16 / 13 / 10	22 / 16 / 13 / 10	26 / 17 / 14 / 11	28 / 18 / 15 / 12	22 / 16 / 13 / 10
	Outdoor	Cooling/Heating		60 / 50	100 / 100	100 / 100	100 / 100	100 / 100
Exterior dimensions	Indoor	HeightxWidthxDepth	mm	Unit: 236 x 840 x 840 Panel: 35 x 950 x 950				
	Outdoor			750 x 880(+88) x 340	1300 x 970 x 370			
Net weight	Indoor		kg	24(Unit:19 Standard Panel:5)		26(Unit:21 Standard Panel:5)		24(Unit:19 Standard Panel:5)
	Outdoor			60	97			
Ref.piping size	Liquid/Gas		ømm	9.52(3/8") / 15.88(5/8")				
Refrigerant line (one way) length			m	Max. 50	Max. 100			
Vertical height differences		Outdoor is higher/lower	m	Max.30 / Max.15	Max.50 / Max.15			
Outdoor operating temperature range		Cooling	°CDB	-15 to 50*2				
		Heating	°CWB	-20 to 20				
Panel				T-PSA-5BW-E, T-PSAE-5BW-E(White) / T-PSA-5BB-E, T-PSAE-5BB-E(Black)				
Air filter, Q'ty				Pocket plastic net x 1(Washable)				
Remote control (option)				Wired:RC-EX3D, RC-E5, RC-ES1 Wireless:RCN-T-5BW-E2, RCN-T-5BB-E2				

NOTES:

The data are measured under the following conditions(R32:ISO-T1,-H1 / R410A:ISO-T1).
Cooling:Indoor temp. of 27°CDB, 19°CWB, and outdoor temp. of 35°CDB. Heating:Indoor temp. of 20°CDB, and outdoor temp. of 7°CDB, 6°CWB.
*1 : Indicates the value in an anechoic chamber. During operation these values are somewhat higher due to ambient conditions.
*2 : If a cooling operation is conducted when the outdoor air temperature is –5°C or lower, the outdoor unit should be installed at a place where it is not influenced by natural wind. If wind blows, the low pressure will drop and compressor frequency will increase, this will cause the capacity to drop and may cause the unit to break down.
*3 : The values are for one indoor unit operation. (Multi system only)

The values are for simultaneous Multi operation.

R32				Hyper Inverter			
Set model name				FDT100VSXWPVH	FDT125VSXWPVH	FDT140VSXWPVH	FDT140VSXWTVH
					Twin		Triple
Indoor unit				FDT50VH x 2	FDT60VH x 2	FDT71VH x 2	FDT50VH x 3
Outdoor unit				FDC100VSX-W	FDC125VSX-W	FDC140VSX-W	FDC140VSX-W
Power source				3 Phase 380-415V, 50Hz / 380V, 60Hz			
Nominal cooling capacity (Min - Max)			kW	10.0 (3.5 - 11.2)	12.5 (3.5 - 14.0)	14.0 (3.5 - 16.0)	14.0 (3.5 - 16.0)
Nominal heating capacity (Min - Max)			kW	11.2 (2.7 - 16.0)	14.0 (2.7 - 18.0)	16.0 (2.7 - 20.0)	16.0 (2.7 - 20.0)
Power consumption		Cooling/Heating	kW	2.30 / 2.64	2.98 / 3.03	3.44 / 3.64	3.48 / 3.74
EER/COP		Cooling/Heating		4.35 / 4.25	4.19 / 4.62	4.07 / 4.40	4.02 / 4.28
Inrush current			A	5	5	5	5
Max. current				14	14	14	14
Sound power level*1	Indoor*3	Cooling/Heating	dB(A)	55 / 56	58 / 59	59 / 60	55 / 56
	Outdoor	Cooling/Heating		67 / 67	68 / 70	69 / 71	69 / 71
Sound pressure level*1	Indoor*3	Cooling (P-Hi/Hi/Me/Lo)		41 / 33 / 30 / 26	44 / 34 / 30 / 27	46 / 34 / 31 / 26	41 / 33 / 30 / 26
		Heating (P-Hi/Hi/Me/Lo)		42 / 33 / 28 / 20	44 / 34 / 30 / 23	46 / 34 / 31 / 26	42 / 33 / 28 / 20
	Outdoor	Cooling/Heating		53 / 51	53 / 54	54 / 54	54 / 54
Air flow	Indoor*3	Cooling (P-Hi/Hi/Me/Lo)	m^3/min	22 / 16 / 13 / 10	26 / 17 / 14 / 11	28 / 18 / 15 / 12	22 / 16 / 13 / 10
		Heating (P-Hi/Hi/Me/Lo)		22 / 16 / 13 / 10	26 / 17 / 14 / 11	28 / 18 / 15 / 12	22 / 16 / 13 / 10
	Outdoor	Cooling/Heating		100 / 100	100 / 100	100 / 100	100 / 100
Exterior dimensions	Indoor	HeightxWidthxDepth	mm	Unit: 236 x 840 x 840 Panel: 35 x 950 x 950			
	Outdoor			1300 x 970 x 370			
Net weight	Indoor		kg	24(Unit:19 Standard Panel:5)	26(Unit:21 Standard Panel:5)		24(Unit:19 Standard Panel:5)
	Outdoor			99			
Ref.piping size	Liquid/Gas		ømm	9.52(3/8") / 15.88(5/8")			
Refrigerant line (one way) length			m	Max.100			
Vertical height differences		Outdoor is higher/lower	m	Max.50 / Max.15			
Outdoor operating temperature range		Cooling	°CDB	-15 to 50*2			
		Heating	°CWB	-20 to 20			
Panel				T-PSA-5BW-E, T-PSAE-5BW-E(White) / T-PSA-5BB-E, T-PSAE-5BB-E(Black)			
Air filter, Q'ty				Pocket plastic net x 1(Washable)			
Remote control (option)				Wired:RC-EX3D, RC-E5, RC-ES1 Wireless:RCN-T-5BW-E2, RCN-T-5BB-E2			

R410A				Hyper Inverter		
Set model name				FDT100VNXVH	FDT125VNXVH	FDT140VNXVH
Indoor unit				FDT100VH	FDT125VH	FDT140VH
Outdoor unit				FDC100VNX	FDC125VNX	FDC140VNX
Power source				1 Phase 220-240V, 50Hz / 220V, 60Hz		
Nominal cooling capacity (Min - Max)			kW	10.0 (4.0 - 11.2)	12.5 (5.0 - 14.0)	14.0 (5.0 - 16.0)
Nominal heating capacity (Min - Max)			kW	11.2 (4.0 - 12.5)	14.0 (4.0 - 17.0)	16.0 (4.0 - 18.0)
Power consumption		Cooling/Heating	kW	2.50 / 2.58	3.42 / 3.43	4.58 / 4.20
EER/COP		Cooling/Heating		4.00 / 4.34	3.65 / 4.08	3.06 / 3.81
Inrush current			A	5	5	5
Max. current				24	26	26
Sound power level*1	Indoor	Cooling/Heating	dB(A)	62 / 62	63 / 64	63 / 64
	Outdoor	Cooling/Heating		70 / 70	70 / 70	72 / 72
Sound pressure level*1	Indoor	Cooling (P-Hi/Hi/Me/Lo)		47 / 39 / 36 / 30	48 / 41 / 39 / 31	48 / 42 / 39 / 32
		Heating (P-Hi/Hi/Me/Lo)		47 / 39 / 36 / 29	48 / 41 / 38 / 31	48 / 41 / 38 / 31
	Outdoor	Cooling/Heating		48 / 50	48 / 50	49 / 52
Air flow	Indoor	Cooling (P-Hi/Hi/Me/Lo)	m^3/min	37 / 26 / 23 / 17	38 / 28 / 25 / 18	38 / 29 / 26 / 19
		Heating (P-Hi/Hi/Me/Lo)		37 / 26 / 23 / 17	38 / 28 / 25 / 18	38 / 29 / 26 / 19
	Outdoor	Cooling/Heating		100 / 100	100 / 100	100 / 100
Exterior dimensions	Indoor	HeightxWidthxDepth	mm	Unit: 298 x 840 x 840 Panel: 35 x 950 x 950		
	Outdoor			1300 x 970 x 370		
Net weight	Indoor		kg	30(Unit:25 Standard Panel:5)		
	Outdoor			105		
Ref.piping size	Liquid/Gas		ømm	9.52(3/8") / 15.88(5/8")		
Refrigerant line (one way) length			m	Max.100		
Vertical height differences		Outdoor is higher/lower	m	Max.30 / Max.15		
Outdoor operating temperature range		Cooling	°CDB	-15 to 43*2		
		Heating	°CWB	-20 to 20		
Panel				T-PSA-5BW-E, T-PSAE-5BW-E(White) / T-PSA-5BB-E, T-PSAE-5BB-E(Black)		
Air filter, Q'ty				Pocket plastic net x 1(Washable)		
Remote control (option)				Wired:RC-EX3D, RC-E5, RC-ES1 Wireless:RCN-T-5BW-E2, RCN-T-5BB-E2		

SPECIFICATIONS -FDT-

R410A				Hyper Inverter		
Set model name				FDT100VSXVH	FDT125VSXVH	FDT140VSXVH
Indoor unit				FDT100VH	FDT125VH	FDT140VH
Outdoor unit				FDC100VSX	FDC125VSX	FDC140VSX
Power source				3 Phase 380-415V, 50Hz / 380V, 60Hz		
Nominal cooling capacity (Min - Max)			kW	10.0 (4.0 - 11.2)	12.5 (5.0 - 14.0)	14.0 (5.0 - 16.0)
Nominal heating capacity (Min - Max)			kW	11.2 (4.0 - 16.0)	14.0 (4.0 - 18.0)	16.0 (4.0 - 20.0)
Power consumption		Cooling/Heating	kW	2.50 / 2.58	3.42 / 3.43	4.58 / 4.20
EER/COP		Cooling/Heating		4.00 / 4.34	3.65 / 4.08	3.06 / 3.81
Inrush current			A	5	5	5
Max. current				15	15	15
Sound power level*1	Indoor	Cooling/Heating	dB(A)	62 / 62	63 / 64	63 / 64
	Outdoor	Cooling/Heating		70 / 70	70 / 70	72 / 72
Sound pressure level*1	Indoor	Cooling (P-Hi/Hi/Me/Lo)		47 / 39 / 36 / 30	48 / 41 / 39 / 31	48 / 42 / 39 / 32
		Heating (P-Hi/Hi/Me/Lo)		47 / 39 / 36 / 29	48 / 41 / 38 / 31	48 / 41 / 38 / 31
	Outdoor	Cooling/Heating		48 / 50	48 / 50	49 / 52
Air flow	Indoor	Cooling (P-Hi/Hi/Me/Lo)	m^3/min	37 / 26 / 23 / 17	38 / 28 / 25 / 18	38 / 29 / 26 / 19
		Heating (P-Hi/Hi/Me/Lo)		37 / 26 / 23 / 17	38 / 28 / 25 / 18	38 / 29 / 26 / 19
	Outdoor	Cooling/Heating		100 / 100	100 / 100	100 / 100
Exterior dimensions	Indoor	HeightxWidthxDepth	mm	Unit: 298 x 840 x 840 Panel: 35 x 950 x 950		
	Outdoor			1300 x 970 x 370		
Net weight	Indoor		kg	30(Unit:25 Standard Panel:5)		
	Outdoor			105		
Ref.piping size	Liquid/Gas		ømm	9.52(3/8") / 15.88(5/8")		
Refrigerant line (one way) length			m	Max.100		
Vertical height differences		Outdoor is higher/lower	m	Max.30 / Max.15		
Outdoor operating temperature range		Cooling	°CDB	-15 to 43*2		
		Heating	°CWB	-20 to 20		
Panel				T-PSA-5BW-E, T-PSAE-5BW-E(White) / T-PSA-5BB-E, T-PSAE-5BB-E(Black)		
Air filter, Q'ty				Pocket plastic net x 1(Washable)		
Remote control (option)				Wired:RC-EX3D, RC-E5, RC-ES1 Wireless:RCN-T-5BW-E2, RCN-T-5BB-E2		

The values are for simultaneous Multi operation.

R410A				Hyper Inverter			
Set model name				FDT100VNXPVH	FDT125VNXPVH	FDT140VNXPVH	FDT140VNXTVH
				Twin			Triple
Indoor unit				FDT50VH x 2	FDT60VH x 2	FDT71VH x 2	FDT50VH x 3
Outdoor unit				FDC100VNX	FDC125VNX	FDC140VNX	FDC140VNX
Power source				1 Phase 220-240V, 50Hz / 220V, 60Hz			
Nominal cooling capacity (Min - Max)			kW	10.0 (4.0 - 11.2)	12.5 (5.0 - 14.0)	14.0 (5.0 - 16.0)	14.0 (5.0 - 16.0)
Nominal heating capacity (Min - Max)			kW	11.2 (4.0 - 12.5)	14.0 (4.0 - 17.0)	16.0 (4.0 - 18.0)	16.0 (4.0 - 18.0)
Power consumption		Cooling/Heating	kW	2.56 / 2.67	3.26 / 3.22	3.88 / 3.74	3.93 / 4.00
EER/COP		Cooling/Heating		3.91 / 4.19	3.83 / 4.35	3.61 / 4.28	3.56 / 4.00
Inrush current			A	5	5	5	5
Max. current				24	26	26	26
Sound power level*1	Indoor*3	Cooling/Heating	dB(A)	55 / 56	58 / 59	59 / 60	55 / 56
	Outdoor	Cooling/Heating		70 / 70	70 / 70	72 / 72	72 / 72
Sound pressure level*1	Indoor*3	Cooling (P-Hi/Hi/Me/Lo)		41 / 33 / 30 / 26	44 / 34 / 30 / 27	46 / 34 / 31 / 26	41 / 33 / 30 / 26
		Heating (P-Hi/Hi/Me/Lo)		42 / 33 / 28 / 20	44 / 34 / 30 / 23	46 / 34 / 31 / 26	42 / 33 / 28 / 20
	Outdoor	Cooling/Heating		48 / 50	48 / 50	49 / 52	49 / 52
Air flow	Indoor*3	Cooling (P-Hi/Hi/Me/Lo)	m^3/min	22 / 16 / 13 / 10	26 / 17 / 14 / 11	28 / 18 / 15 / 12	22 / 16 / 13 / 10
		Heating (P-Hi/Hi/Me/Lo)		22 / 16 / 13 / 10	26 / 17 / 14 / 11	28 / 18 / 15 / 12	22 / 16 / 13 / 10
	Outdoor	Cooling/Heating		100 / 100	100 / 100	100 / 100	100 / 100
Exterior dimensions	Indoor	HeightxWidthxDepth	mm	Unit: 236 x 840 x 840 Panel: 35 x 950 x 950			
	Outdoor			1300 x 970 x 370			
Net weight	Indoor		kg	24(Unit:19 Standard Panel:5)	26(Unit:21 Standard Panel:5)		24(Unit:19 Standard Panel:5)
	Outdoor			105			
Ref.piping size	Liquid/Gas		ømm	9.52(3/8") / 15.88(5/8")			
Refrigerant line (one way) length			m	Max. 100			
Vertical height differences		Outdoor is higher/lower	m	Max.30 / Max.15			
Outdoor operating temperature range		Cooling	°CDB	-15 to 43*2			
		Heating	°CWB	-20 to 20			
Panel				T-PSA-5BW-E, T-PSAE-5BW-E(White) / T-PSA-5BB-E, T-PSAE-5BB-E(Black)			
Air filter, Q'ty				Pocket plastic net x 1(Washable)			
Remote control (option)				Wired:RC-EX3D, RC-E5, RC-ES1 Wireless:RCN-T-5BW-E2, RCN-T-5BB-E2			

NOTES:

The data are measured under the following conditions(R32:ISO-T1,-H1 / R410A:ISO-T1).
Cooling:Indoor temp. of 27°CDB, 19°CWB, and outdoor temp. of 35°CDB. Heating:Indoor temp. of 20°CDB, and outdoor temp. of 7°CDB, 6°CWB.
*1 : Indicates the value in an anechoic chamber. During operation these values are somewhat higher due to ambient conditions.
*2 : If a cooling operation is conducted when the outdoor air temperature is –5°C or lower, the outdoor unit should be installed at a place where it is not influenced by natural wind. If wind blows, the low pressure will drop and compressor frequency will increase, this will cause the capacity to drop and may cause the unit to break down.
*3 : The values are for one indoor unit operation. (Multi system only)

The values are for simultaneous Multi operation.

R410A				Hyper Inverter			
Set model name				FDT100VSXPVH	FDT125VSXPVH	FDT140VSXPVH	FDT140VSXTVH
					Twin		Triple
Indoor unit				FDT50VH x 2	FDT60VH x 2	FDT71VH x 2	FDT50VH x 3
Outdoor unit				FDC100VSX	FDC125VSX	FDC140VSX	FDC140VSX
Power source				3 Phase 380-415V, 50Hz / 380V, 60Hz			
Nominal cooling capacity (Min - Max)			kW	10.0 (4.0 - 11.2)	12.5 (5.0 - 14.0)	14.0 (5.0 - 16.0)	14.0 (5.0 - 16.0)
Nominal heating capacity (Min - Max)			kW	11.2 (4.0 - 16.0)	14.0 (4.0 - 18.0)	16.0 (4.0 - 20.0)	16.0 (4.0 - 20.0)
Power consumption		Cooling/Heating	kW	2.56 / 2.67	3.26 / 3.22	3.88 / 3.74	3.93 / 4.00
EER/COP		Cooling/Heating		3.91 / 4.19	3.83 / 4.35	3.61 / 4.28	3.56 / 4.00
Inrush current			A	5	5	5	5
Max. current				15	15	15	15
Sound power level*1	Indoor*3	Cooling/Heating	dB(A)	55 / 56	58 / 59	59 / 60	55 / 56
	Outdoor	Cooling/Heating		70 / 70	70 / 70	72 / 72	72 / 72
Sound pressure level*1	Indoor*3	Cooling (P-Hi/Hi/Me/Lo)		41 / 33 / 30 / 26	44 / 34 / 30 / 27	46 / 34 / 31 / 26	41 / 33 / 30 / 26
		Heating (P-Hi/Hi/Me/Lo)		42 / 33 / 28 / 20	44 / 34 / 30 / 23	46 / 34 / 31 / 26	42 / 33 / 28 / 20
	Outdoor	Cooling/Heating		48 / 50	48 / 50	49 / 52	49 / 52
Air flow	Indoor*3	Cooling (P-Hi/Hi/Me/Lo)	m^3/min	22 / 16 / 13 / 10	26 / 17 / 14 / 11	28 / 18 / 15 / 12	22 / 16 / 13 / 10
		Heating (P-Hi/Hi/Me/Lo)		22 / 16 / 13 / 10	26 / 17 / 14 / 11	28 / 18 / 15 / 12	22 / 16 / 13 / 10
	Outdoor	Cooling/Heating		100 / 100	100 / 100	100 / 100	100 / 100
Exterior dimensions	Indoor	HeightxWidthxDepth	mm	Unit: 236 x 840 x 840 Panel: 35 x 950 x 950			
	Outdoor			1300 x 970 x 370			
Net weight	Indoor		kg	24(Unit:19 Standard Panel:5)	26(Unit:21 Standard Panel:5)		24(Unit:19 Standard Panel:5)
	Outdoor			105			
Ref.piping size	Liquid/Gas		ømm	9.52(3/8") / 15.88(5/8")			
Refrigerant line (one way) length			m	Max.100			
Vertical height differences		Outdoor is higher/lower	m	Max.30 / Max.15			
Outdoor operating temperature range		Cooling	°CDB	-15 to 43*2			
		Heating	°CWB	-20 to 20			
Panel				T-PSA-5BW-E, T-PSAE-5BW-E(White) / T-PSA-5BB-E, T-PSAE-5BB-E(Black)			
Air filter, Q'ty				Pocket plastic net x 1(Washable)			
Remote control (option)				Wired:RC-EX3D, RC-E5, RC-ES1 Wireless:RCN-T-5BW-E2, RCN-T-5BB-E2			

R32				Micro Inverter		
Set model name				FDT100VNAWVH	FDT125VNAWVH	FDT140VNAWVH
Indoor unit				FDT100VH	FDT125VH	FDT140VH
Outdoor unit				FDC100VNA-W	FDC125VNA-W	FDC140VNA-W
Power source				1 Phase 220-240V, 50Hz / 220V, 60Hz		
Nominal cooling capacity (Min - Max)			kW	10.0 (4.0 - 11.2)	12.5 (5.0 - 14.0)	13.6 (5.0 - 14.5)
Nominal heating capacity (Min - Max)			kW	11.2 (4.0 - 12.5)	14.0 (4.0 - 16.0)	15.5 (4.0 - 16.5)
Power consumption		Cooling/Heating	kW	2.73 / 2.54	4.05 / 3.59	4.79 / 4.18
EER/COP		Cooling/Heating		3.66 / 4.41	3.09 / 3.90	2.84 / 3.71
Inrush current			A	5	5	5
Max. current				24	24	24
Sound power level*1	Indoor	Cooling/Heating	dB(A)	62 / 62	63 / 64	63 / 64
	Outdoor	Cooling/Heating		69 / 70	71 / 71	72 / 73
Sound pressure level*1	Indoor	Cooling (P-Hi/Hi/Me/Lo)		47 / 39 / 36 / 30	48 / 41 / 39 / 31	48 / 42 / 39 / 32
		Heating (P-Hi/Hi/Me/Lo)		47 / 39 / 36 / 29	48 / 41 / 38 / 31	48 / 41 / 38 / 31
	Outdoor	Cooling/Heating		54 / 55	54 / 56	56 / 58
Air flow	Indoor	Cooling (P-Hi/Hi/Me/Lo)	m^3/min	37 / 26 / 23 / 17	38 / 28 / 25 / 18	38 / 29 / 26 / 19
		Heating (P-Hi/Hi/Me/Lo)		37 / 26 / 23 / 17	38 / 28 / 25 / 18	38 / 29 / 26 / 19
	Outdoor	Cooling/Heating		75 / 73	75 / 73	75 / 73
Exterior dimensions	Indoor	HeightxWidthxDepth	mm	Unit: 298 x 840 x 840 Panel: 35 x 950 x 950		
	Outdoor			845 x 970 x 370		
Net weight	Indoor		kg	30(Unit:25 Standard Panel:5)		
	Outdoor			77		
Ref.piping size	Liquid/Gas		ømm	9.52(3/8") / 15.88(5/8")		
Refrigerant line (one way) length			m	Max.50		
Vertical height differences		Outdoor is higher/lower	m	Max.50 / Max.15		
Outdoor operating temperature range		Cooling	°CDB	-15 to 50*2		
		Heating	°CWB	-20 to 20		
Panel				T-PSA-5BW-E, T-PSAE-5BW-E(White) / T-PSA-5BB-E, T-PSAE-5BB-E(Black)		
Air filter, Q'ty				Pocket plastic net x 1(Washable)		
Remote control (option)				Wired:RC-EX3D, RC-E5, RC-ES1 Wireless:RCN-T-5BW-E2, RCN-T-5BB-E2		

SPECIFICATIONS -FDT-

R32				Micro Inverter		
Set model name				FDT100VSAWVH	FDT125VSAWVH	FDT140VSAWVH
Indoor unit				FDT100VH	FDT125VH	FDT140VH
Outdoor unit				FDC100VSA-W	FDC125VSA-W	FDC140VSA-W
Power source				3 Phase 380-415V, 50Hz / 380V, 60Hz		
Nominal cooling capacity (Min - Max)			kW	10.0 (4.0 - 11.2)	12.5 (5.0 - 14.0)	13.6 (5.0 - 14.5)
Nominal heating capacity (Min - Max)			kW	11.2 (4.0 - 12.5)	14.0 (4.0 - 16.0)	15.5 (4.0 - 16.5)
Power consumption		Cooling/Heating	kW	2.73 / 2.54	4.05 / 3.59	4.79 / 4.18
EER/COP		Cooling/Heating		3.66 / 4.41	3.09 / 3.90	2.84 / 3.71
Inrush current			A	5	5	5
Max. current				15	15	15
Sound power level*1	Indoor	Cooling/Heating	dB(A)	62 / 62	63 / 64	63 / 64
	Outdoor	Cooling/Heating		69 / 70	71 / 71	72 / 73
Sound pressure level*1	Indoor	Cooling (P-Hi/Hi/Me/Lo)		47 / 39 / 36 / 30	48 / 41 / 39 / 31	48 / 42 / 39 / 32
		Heating (P-Hi/Hi/Me/Lo)		47 / 39 / 36 / 29	48 / 41 / 38 / 31	48 / 41 / 38 / 31
	Outdoor	Cooling/Heating		54 / 55	54 / 56	56 / 58
Air flow	Indoor	Cooling (P-Hi/Hi/Me/Lo)	m^3/min	37 / 26 / 23 / 17	38 / 28 / 25 / 18	38 / 29 / 26 / 19
		Heating (P-Hi/Hi/Me/Lo)		37 / 26 / 23 / 17	38 / 28 / 25 / 18	38 / 29 / 26 / 19
	Outdoor	Cooling/Heating		75 / 73	75 / 73	75 / 73
Exterior dimensions	Indoor	HeightxWidthxDepth	mm	Unit: 298 x 840 x 840 Panel: 35 x 950 x 950		
	Outdoor			845 x 970 x 370		
Net weight	Indoor		kg	30(Unit:25 Standard Panel:5)		
	Outdoor			78		
Ref.piping size	Liquid/Gas		ømm	9.52(3/8") / 15.88(5/8")		
Refrigerant line (one way) length			m	Max.50		
Vertical height differences		Outdoor is higher/lower	m	Max.50 / Max.15		
Outdoor operating temperature range		Cooling	°CDB	-15 to 50*2		
		Heating	°CWB	-20 to 20		
Panel				T-PSA-5BW-E, T-PSAE-5BW-E(White) / T-PSA-5BB-E, T-PSAE-5BB-E(Black)		
Air filter, Q'ty				Pocket plastic net x 1(Washable)		
Remote control (option)				Wired:RC-EX3D, RC-E5, RC-ES1 Wireless:RCN-T-5BW-E2, RCN-T-5BB-E2		

The values are for simultaneous Multi operation.

R32				Micro Inverter			
Set model name				FDT100VNAWPVH	FDT125VNAWPVH	FDT140VNAWPVH	FDT140VNAWTVH
					Twin		Triple
Indoor unit				FDT50VH x 2	FDT60VH x 2	FDT71VH x 2	FDT50VH x 3
Outdoor unit				FDC100VNA-W	FDC125VNA-W	FDC140VNA-W	FDC140VNA-W
Power source				1 Phase 220-240V, 50Hz / 220V, 60Hz			
Nominal cooling capacity (Min - Max)			kW	10.0 (4.0 - 11.2)	12.5 (5.0 - 14.0)	13.6 (5.0 - 14.5)	13.6 (5.0 - 14.5)
Nominal heating capacity (Min - Max)			kW	11.2 (4.0 - 12.5)	14.0 (4.0 - 16.0)	15.5 (4.0 - 16.5)	15.5 (4.0 - 16.5)
Power consumption		Cooling/Heating	kW	2.82 / 2.73	3.79 / 3.31	4.22 / 3.57	4.22 / 3.57
EER/COP		Cooling/Heating		3.55 / 4.11	3.30 / 4.23	3.22 / 4.34	3.22 / 3.88
Inrush current			A	5	5	5	5
Max. current				24	24	24	24
Sound power level*1	Indoor*3	Cooling/Heating	dB(A)	55 / 56	58 / 59	59 / 60	55 / 56
	Outdoor	Cooling/Heating		69 / 70	71 / 71	72 / 73	72 / 73
Sound pressure level*1	Indoor*3	Cooling (P-Hi/Hi/Me/Lo)		41 / 33 / 30 / 26	44 / 34 / 30 / 27	46 / 34 / 31 / 26	41 / 33 / 30 / 26
		Heating (P-Hi/Hi/Me/Lo)		42 / 33 / 28 / 20	44 / 34 / 30 / 23	46 / 34 / 31 / 26	42 / 33 / 28 / 20
	Outdoor	Cooling/Heating		54 / 55	54 / 56	56 / 58	56 / 58
Air flow	Indoor*3	Cooling (P-Hi/Hi/Me/Lo)	m^3/min	22 / 16 / 13 / 10	26 / 17 / 14 / 11	28 / 18 / 15 / 12	22 / 16 / 13 / 10
		Heating (P-Hi/Hi/Me/Lo)		22 / 16 / 13 / 10	26 / 17 / 14 / 11	28 / 18 / 15 / 12	22 / 16 / 13 / 10
	Outdoor	Cooling/Heating		75 / 73	75 / 73	75 / 73	75 / 73
Exterior dimensions	Indoor	HeightxWidthxDepth	mm	Unit: 236 x 840 x 840 Panel: 35 x 950 x 950			
	Outdoor			845 x 970 x 370			
Net weight	Indoor		kg	24(Unit:19 Standard Panel:5)	26(Unit:21 Standard Panel:5)		24(Unit:19 Standard Panel:5)
	Outdoor			77			
Ref.piping size	Liquid/Gas		ømm	9.52(3/8") / 15.88(5/8")			
Refrigerant line (one way) length			m	Max.50			
Vertical height differences		Outdoor is higher/lower	m	Max.50 / Max.15			
Outdoor operating temperature range		Cooling	°CDB	-15 to 50*2			
		Heating	°CWB	-20 to 20			
Panel				T-PSA-5BW-E, T-PSAE-5BW-E(White) / T-PSA-5BB-E, T-PSAE-5BB-E(Black)			
Air filter, Q'ty				Pocket plastic net x 1(Washable)			
Remote control (option)				Wired:RC-EX3D, RC-E5, RC-ES1 Wireless:RCN-T-5BW-E2, RCN-T-5BB-E2			

NOTES:

The data are measured under the following conditions(ISO-T1, -H1).
Cooling:Indoor temp. of 27˚CDB, 19˚CWB, and outdoor temp. of 35˚CDB. Heating:Indoor temp. of 20˚CDB, and outdoor temp. of 7˚CDB, 6˚CWB.
*1 : Indicates the value in an anechoic chamber. During operation these values are somewhat higher due to ambient conditions.
*2 : If a cooling operation is conducted when the outdoor air temperature is –5˚C or lower, the outdoor unit should be installed at a place where it is not influenced by natural wind. If wind blows, the low pressure will drop and compressor frequency will increase, this will cause the capacity to drop and may cause the unit to break down.
*3 : The values are for one indoor unit operation. (Multi system only)

The values are for simultaneous Multi operation.

R32				Micro Inverter			
Set model name				FDT100VSAWPVH	FDT125VSAWPVH	FDT140VSAWPVH	FDT140VSAWTVH
					Twin		Triple
Indoor unit				FDT50VH x 2	FDT60VH x 2	FDT71VH x 2	FDT50VH x 3
Outdoor unit				FDC100VSA-W	FDC125VSA-W	FDC140VSA-W	FDC140VSA-W
Power source				3 Phase 380-415V, 50Hz / 380V, 60Hz			
Nominal cooling capacity (Min - Max)			kW	10.0 (4.0 - 11.2)	12.5 (5.0 - 14.0)	13.6 (5.0 - 14.5)	13.6 (5.0 - 14.5)
Nominal heating capacity (Min - Max)			kW	11.2 (4.0 - 12.5)	14.0 (4.0 - 16.0)	15.5 (4.0 - 16.5)	15.5 (4.0 - 16.5)
Power consumption		Cooling/Heating	kW	2.82 / 2.73	3.79 / 3.31	4.22 / 3.57	4.22 / 3.57
EER/COP		Cooling/Heating		3.55 / 4.11	3.30 / 4.23	3.22 / 4.34	3.22 / 3.88
Inrush current			A	5	5	5	5
Max. current				15	15	15	15
Sound power level*1	Indoor*3	Cooling/Heating	dB(A)	55 / 56	58 / 59	59 / 60	55 / 56
	Outdoor	Cooling/Heating		69 / 70	71 / 71	72 / 73	72 / 73
Sound pressure level*1	Indoor*3	Cooling (P-Hi/Hi/Me/Lo)		41 / 33 / 30 / 26	44 / 34 / 30 / 27	46 / 34 / 31 / 26	41 / 33 / 30 / 26
		Heating (P-Hi/Hi/Me/Lo)		42 / 33 / 28 / 20	44 / 34 / 30 / 23	46 / 34 / 31 / 26	42 / 33 / 28 / 20
	Outdoor	Cooling/Heating		54 / 55	54 / 56	56 / 58	56 / 58
Air flow	Indoor*3	Cooling (P-Hi/Hi/Me/Lo)	m^3/min	22 / 16 / 13 / 10	26 / 17 / 14 / 11	28 / 18 / 15 / 12	22 / 16 / 13 / 10
		Heating (P-Hi/Hi/Me/Lo)		22 / 16 / 13 / 10	26 / 17 / 14 / 11	28 / 18 / 15 / 12	22 / 16 / 13 / 10
	Outdoor	Cooling/Heating		75 / 73	75 / 73	75 / 73	75 / 73
Exterior dimensions	Indoor	HeightxWidthxDepth	mm	Unit: 236 x 840 x 840 Panel: 35 x 950 x 950			
	Outdoor			845 x 970 x 370			
Net weight	Indoor		kg	24(Unit:19 Standard Panel:5)	26(Unit:21 Standard Panel:5)		24(Unit:19 Standard Panel:5)
	Outdoor			78			
Ref.piping size	Liquid/Gas		ømm	9.52(3/8") / 15.88(5/8")			
Refrigerant line (one way) length			m	Max.50			
Vertical height differences		Outdoor is higher/lower	m	Max.50 / Max.15			
Outdoor operating temperature range		Cooling	°CDB	-15 to 50*2			
		Heating	°CWB	-20 to 20			
Panel				T-PSA-5BW-E, T-PSAE-5BW-E(White) / T-PSA-5BB-E, T-PSAE-5BB-E(Black)			
Air filter, Q'ty				Pocket plastic net x 1(Washable)			
Remote control (option)				Wired:RC-EX3D, RC-E5, RC-ES1 Wireless:RCN-T-5BW-E2, RCN-T-5BB-E2			

The values are for simultaneous Multi operation.

R32				Micro Inverter		
Set model name				FDT200VSAWPVH	FDT250VSAWPVH	FDT280VSAWPVH
					Twin	
Indoor unit				FDT100VH x 2	FDT125VH x 2	FDT140VH x 2
Outdoor unit				FDC200VSA-W	FDC250VSA-W	FDC280VSA-W
Power source				3 Phase 380-415V, 50Hz / 380V, 60Hz		
Nominal cooling capacity (Min - Max)			kW	20.0 (6.8 - 22.4)	25.0 (6.8 - 28.0)	27.0 (7.5 - 31.5)
Nominal heating capacity (Min - Max)			kW	22.4 (6.6 - 25.0)	28.0 (5.7 - 31.5)	30.0 (6.3 - 33.5)
Power consumption		Cooling/Heating	kW	5.48 / 5.27	8.20 / 7.37	9.11 / 8.95
EER/COP		Cooling/Heating		3.65 / 4.25	3.05 / 3.80	2.96 / 3.35
Inrush current			A	5	5	5
Max. current				19	20	20
Sound power level*1	Indoor*3	Cooling/Heating	dB(A)	62 / 62	63 / 64	63 / 64
	Outdoor	Cooling/Heating		72 / 74	73 / 75	75 / 77
Sound pressure level*1	Indoor*3	Cooling (P-Hi/Hi/Me/Lo)		47 / 39 / 36 / 30	48 / 41 / 39 / 31	48 / 42 / 39 / 32
		Heating (P-Hi/Hi/Me/Lo)		47 / 39 / 36 / 29	48 / 41 / 38 / 31	48 / 41 / 38 / 31
	Outdoor	Cooling/Heating		58 / 59	58 / 62	61 / 63
Air flow	Indoor*3	Cooling (P-Hi/Hi/Me/Lo)	m^3/min	37 / 26 / 23 / 17	38 / 28 / 25 / 18	38 / 29 / 26 / 19
		Heating (P-Hi/Hi/Me/Lo)		37 / 26 / 23 / 17	38 / 28 / 25 / 18	38 / 29 / 26 / 19
	Outdoor	Cooling/Heating		148 / 134	148 / 153	136 / 140
Exterior dimensions	Indoor	HeightxWidthxDepth	mm	Unit: 298 x 840 x 840 Panel: 35 x 950 x 950		
	Outdoor			1505 x 970 x 370		
Net weight	Indoor		kg	30(Unit:25 Standard Panel:5)		
	Outdoor			144	145	155
Ref.piping size	Liquid/Gas		ømm	9.52(3/8") / 22.22(7/8")	12.7(1/2") / 22.22(7/8")	
Refrigerant line (one way) length			m	Max.70		Max.60
Vertical height differences		Outdoor is higher/lower	m	Max.50*4 / Max.15		
Outdoor operating temperature range		Cooling	°CDB	-15 to 50*2		
		Heating	°CWB	-20 to 20		
Panel				T-PSA-5BW-E, T-PSAE-5BW-E(White) / T-PSA-5BB-E, T-PSAE-5BB-E(Black)		
Air filter, Q'ty				Pocket plastic net x 1(Washable)		
Remote control (option)				Wired:RC-EX3D, RC-E5, RC-ES1 Wireless:RCN-T-5BW-E2, RCN-T-5BB-E2		

SPECIFICATIONS -FDT-

The values are for simultaneous Multi operation.

R32				Micro Inverter			
Set model name				FDT200VSAWTVH	FDT200VSAWDVH	FDT250VSAWDVH	FDT280VSAWDVH
				Triple	Double Twin		
Indoor unit				FDT71VH x 3	FDT50VH x 4	FDT60VH x 4	FDT71VH x 4
Outdoor unit				FDC200VSA-W	FDC200VSA-W	FDC250VSA-W	FDC280VSA-W
Power source				3 Phase 380-415V, 50Hz / 380V, 60Hz			
Nominal cooling capacity (Min - Max)			kW	20.0 (7.6 - 22.4)	20.0 (6.8 - 22.4)	25.0 (5.2 - 28.0)	27.0 (7.5 - 31.5)
Nominal heating capacity (Min - Max)			kW	22.4 (6.6 - 25.0)	22.4 (6.6 - 25.0)	28.0 (7.2 - 31.5)	30.0 (6.3 - 33.5)
Power consumption		Cooling/Heating	kW	5.56 / 5.27	5.78 / 5.80	7.30 / 6.80	7.77 / 8.60
EER/COP		Cooling/Heating		3.60 / 4.25	3.46 / 3.86	3.42 / 4.12	3.47 / 3.49
Inrush current			A	5	5	5	5
Max. current				19	19	20	20
Sound power level*1	Indoor*3	Cooling/Heating	dB(A)	59 / 60	55 / 56	58 / 59	59 / 60
	Outdoor	Cooling/Heating		72 / 74	72 / 74	73 / 75	75 / 77
Sound pressure level*1	Indoor*3	Cooling (P-Hi/Hi/Me/Lo)		46 / 34 / 31 / 26	41 / 33 / 30 / 26	44 / 34 / 30 / 27	46 / 34 / 31 / 26
		Heating (P-Hi/Hi/Me/Lo)		46 / 34 / 31 / 26	42 / 33 / 28 / 20	44 / 34 / 30 / 23	46 / 34 / 31 / 26
	Outdoor	Cooling/Heating		58 / 59	58 / 59	58 / 62	61 / 63
Air flow	Indoor*3	Cooling (P-Hi/Hi/Me/Lo)	m^3/min	28 / 18 / 15 / 12	22 / 16 / 13 / 10	26 / 17 / 14 / 11	28 / 18 / 15 / 12
		Heating (P-Hi/Hi/Me/Lo)		28 / 18 / 15 / 12	22 / 16 / 13 / 10	26 / 17 / 14 / 11	28 / 18 / 15 / 12
	Outdoor	Cooling/Heating		148 / 134	148 / 134	148 / 153	136 / 140
Exterior dimensions	Indoor	HeightxWidthxDepth	mm	Unit: 236 x 840 x 840 Panel: 35 x 950 x 950			
	Outdoor			1505 x 970 x 370			
Net weight	Indoor		kg	26(Unit:21 Standard Panel:5)	24(Unit:19 Standard Panel:5)	26(Unit:21 Standard Panel:5)	
	Outdoor			144		145	155
Ref.piping size	Liquid/Gas		ømm	9.52(3/8") / 22.22(7/8")		12.7(1/2") / 22.22(7/8")	
Refrigerant line (one way) length			m	Max.70			Max.60
Vertical height differences		Outdoor is higher/lower	m	Max.50*4 / Max.15			
Outdoor operating temperature range		Cooling	°CDB	-15 to 50*2			
		Heating	°CWB	-20 to 20			
Panel				T-PSA-5BW-E, T-PSAE-5BW-E(White) / T-PSA-5BB-E, T-PSAE-5BB-E(Black)			
Air filter, Q'ty				Pocket plastic net x 1(Washable)			
Remote control (option)				Wired:RC-EX3D, RC-E5, RC-ES1 Wireless:RCN-T-5BW-E2, RCN-T-5BB-E2			

R410A				Micro Inverter		
Set model name				FDT100VNAVH	FDT125VNAVH	FDT140VNAVH
Indoor unit				FDT100VH	FDT125VH	FDT140VH
Outdoor unit				FDC100VNA	FDC125VNA	FDC140VNA
Power source				1 Phase 220-240V, 50Hz / 220V, 60Hz		
Nominal cooling capacity (Min - Max)			kW	10.0 (4.0 - 11.2)	12.5 (5.0 - 14.0)	13.6 (5.0 - 14.5)
Nominal heating capacity (Min - Max)			kW	11.2 (4.0 - 12.5)	14.0 (4.0 - 16.0)	15.5 (4.0 - 16.5)
Power consumption		Cooling/Heating	kW	2.73 / 2.64	4.05 / 3.74	5.09 / 4.43
EER/COP		Cooling/Heating		3.26 / 4.26	3.09 / 3.74	2.67 / 3.50
Inrush current			A	5	5	5
Max. current				24	24	24
Sound power level*1	Indoor	Cooling/Heating	dB(A)	62 / 62	63 / 64	63 / 64
	Outdoor	Cooling/Heating		70 / 70	71 / 71	73 / 73
Sound pressure level*1	Indoor	Cooling (P-Hi/Hi/Me/Lo)		47 / 39 / 36 / 30	48 / 41 / 39 / 31	48 / 42 / 39 / 32
		Heating (P-Hi/Hi/Me/Lo)		47 / 39 / 36 / 29	48 / 41 / 38 / 31	48 / 41 / 38 / 31
	Outdoor	Cooling/Heating		54 / 56	55 / 57	57 / 59
Air flow	Indoor	Cooling (P-Hi/Hi/Me/Lo)	m^3/min	37 / 26 / 23 / 17	38 / 28 / 25 / 18	38 / 29 / 26 / 19
		Heating (P-Hi/Hi/Me/Lo)		37 / 26 / 23 / 17	38 / 28 / 25 / 18	38 / 29 / 26 / 19
	Outdoor	Cooling/Heating		75 / 73	75 / 73	75 / 73
Exterior dimensions	Indoor	HeightxWidthxDepth	mm	Unit: 298 x 840 x 840 Panel: 35 x 950 x 950		
	Outdoor			845 x 970 x 370		
Net weight	Indoor		kg	30(Unit:25 Standard Panel:5)		
	Outdoor			80		
Ref.piping size	Liquid/Gas		ømm	9.52(3/8") / 15.88(5/8")		
Refrigerant line (one way) length			m	Max.50		
Vertical height differences		Outdoor is higher/lower	m	Max.50 / Max.15		
Outdoor operating temperature range		Cooling	°CDB	-15 to 50*2		
		Heating	°CWB	-20 to 20		
Panel				T-PSA-5BW-E, T-PSAE-5BW-E(White) / T-PSA-5BB-E, T-PSAE-5BB-E(Black)		
Air filter, Q'ty				Pocket plastic net x 1(Washable)		
Remote control (option)				Wired:RC-EX3D, RC-E5, RC-ES1 Wireless:RCN-T-5BW-E2, RCN-T-5BB-E2		

NOTES:

The data are measured under the following conditions(R32 : ISO-T1, -H1 /, R410A:ISO-T1).
Cooling:Indoor temp. of 27°CDB, 19°CWB, and outdoor temp. of 35°CDB. Heating:Indoor temp. of 20°CDB, and outdoor temp. of 7°CDB, 6°CWB.
*1 : Indicates the value in an anechoic chamber. During operation these values are somewhat higher due to ambient conditions.
*2 : If a cooling operation is conducted when the outdoor air temperature is –5°C or lower, the outdoor unit should be installed at a place where it is not influenced by natural wind. If wind blows, the low pressure will drop and compressor frequency will increase, this will cause the capacity to drop and may cause the unit to break down.
*3 : The values are for one indoor unit operation. (Multi system only)
*4 : In case of following conditions:Max.50m(Outdoor unit is higher & Outdoor temperature ≦ 43°C), Max.30m(Outdoor unit is higher & Outdoor temperature > 43°C)

R410A				Micro Inverter		
Set model name				FDT100VSAVH	FDT125VSAVH	FDT140VSAVH
Indoor unit				FDT100VH	FDT125VH	FDT140VH
Outdoor unit				FDC100VSA	FDC125VSA	FDC140VSA
Power source				3 Phase 380-415V, 50Hz / 380V, 60Hz		
Nominal cooling capacity (Min - Max)			kW	10.0 (4.0 - 11.2)	12.5 (5.0 - 14.0)	13.6 (5.0 - 14.5)
Nominal heating capacity (Min - Max)			kW	11.2 (4.0 - 12.5)	14.0 (4.0 - 16.0)	15.5 (4.0 - 16.5)
Power consumption		Cooling/Heating	kW	2.73 / 2.63	4.05 / 3.74	5.09 / 4.43
EER/COP		Cooling/Heating		3.66 / 4.26	3.09 / 3.74	2.67 / 3.50
Inrush current			A	5	5	5
Max. current				15	15	15
Sound power level*1	Indoor	Cooling/Heating	dB(A)	62 / 62	63 / 64	63 / 64
	Outdoor	Cooling/Heating		70 / 70	71 / 71	73 / 73
Sound pressure level*1	Indoor	Cooling (P-Hi/Hi/Me/Lo)		47 / 39 / 36 / 30	48 / 41 / 39 / 31	48 / 42 / 39 / 32
		Heating (P-Hi/Hi/Me/Lo)		47 / 39 / 36 / 29	48 / 41 / 38 / 31	48 / 41 / 38 / 31
	Outdoor	Cooling/Heating		54 / 56	55 / 57	57 / 59
Air flow	Indoor	Cooling (P-Hi/Hi/Me/Lo)	m^3/min	37 / 26 / 23 / 17	38 / 28 / 25 / 18	38 / 29 / 26 / 19
		Heating (P-Hi/Hi/Me/Lo)		37 / 26 / 23 / 17	38 / 28 / 25 / 18	38 / 29 / 26 / 19
	Outdoor	Cooling/Heating		75 / 73	75 / 73	75 / 73
Exterior dimensions	Indoor	HeightxWidthxDepth	mm	Unit: 298 x 840 x 840 Panel: 35 x 950 x 950		
	Outdoor			845 x 970 x 370		
Net weight	Indoor		kg	30(Unit:25 Standard Panel:5)		
	Outdoor			82		
Ref.piping size	Liquid/Gas		ømm	9.52(3/8") / 15.88(5/8")		
Refrigerant line (one way) length			m	Max.50		
Vertical height differences		Outdoor is higher/lower	m	Max.50 / Max.15		
Outdoor operating temperature range		Cooling	°CDB	-15 to 50*2		
		Heating	°CWB	-20 to 20		
Panel				T-PSA-5BW-E, T-PSAE-5BW-E(White) / T-PSA-5BB-E, T-PSAE-5BB-E(Black)		
Air filter, Q'ty				Pocket plastic net x 1(Washable)		
Remote control (option)				Wired:RC-EX3D, RC-E5, RC-ES1 Wireless:RCN-T-5BW-E2, RCN-T-5BB-E2		

The values are for simultaneous Multi operation.

R410A				Micro Inverter			
Set model name				FDT100VNAPVH	FDT125VNAPVH	FDT140VNAPVH	FDT140VNATVH
					Twin		Triple
Indoor unit				FDT50VH x 2	FDT60VH x 2	FDT71VH x 2	FDT50VH x 3
Outdoor unit				FDC100VNA	FDC125VNA	FDC140VNA	FDC140VNA
Power source				1 Phase 220-240V, 50Hz / 220V, 60Hz			
Nominal cooling capacity (Min - Max)			kW	10.0 (4.0 - 11.2)	12.5 (5.0 - 14.0)	13.6 (5.0 - 14.5)	13.6 (5.0 - 14.5)
Nominal heating capacity (Min - Max)			kW	11.2 (4.0 - 12.5)	14.0 (4.0 - 16.0)	15.5 (4.0 - 16.5)	15.5 (4.0 - 16.5)
Power consumption		Cooling/Heating	kW	2.82 / 2.90	3.79 / 3.31	4.22 / 3.72	4.22 / 3.29
EER/COP		Cooling/Heating		3.55 / 3.86	3.30 / 4.23	3.22 / 4.17	3.22 / 4.71
Inrush current			A	5	5	5	5
Max. current				24	24	24	24
Sound power level*1	Indoor*3	Cooling/Heating	dB(A)	55 / 56	58 / 59	59 / 60	55 / 56
	Outdoor	Cooling/Heating		70 / 70	71 / 71	73 / 73	73 / 73
Sound pressure level*1	Indoor*3	Cooling (P-Hi/Hi/Me/Lo)		41 / 33 / 30 / 26	44 / 34 / 30 / 27	46 / 34 / 31 / 26	41 / 33 / 30 / 26
		Heating (P-Hi/Hi/Me/Lo)		42 / 33 / 28 / 20	44 / 34 / 30 / 23	46 / 34 / 31 / 26	42 / 33 / 28 / 20
	Outdoor	Cooling/Heating		54 / 56	55 / 57	57 / 59	57 / 59
Air flow	Indoor*3	Cooling (P-Hi/Hi/Me/Lo)	m^3/min	22 / 16 / 13 / 10	26 / 17 / 14 / 11	28 / 18 / 15 / 12	22 / 16 / 13 / 10
		Heating (P-Hi/Hi/Me/Lo)		22 / 16 / 13 / 10	26 / 17 / 14 / 11	28 / 18 / 15 / 12	22 / 16 / 13 / 10
	Outdoor	Cooling/Heating		75 / 73	75 / 73	75 / 73	75 / 73
Exterior dimensions	Indoor	HeightxWidthxDepth	mm	Unit: 236 x 840 x 840 Panel: 35 x 950 x 950			
	Outdoor			845 x 970 x 370			
Net weight	Indoor		kg	24(Unit:19 Standard Panel:5)	26(Unit:21 Standard Panel:5)		24(Unit:19 Standard Panel:5)
	Outdoor			80			
Ref.piping size	Liquid/Gas		ømm	9.52(3/8") / 15.88(5/8")			
Refrigerant line (one way) length			m	Max.50			
Vertical height differences		Outdoor is higher/lower	m	Max.50 / Max.15			
Outdoor operating temperature range		Cooling	°CDB	-15 to 50*2			
		Heating	°CWB	-20 to 20			
Panel				T-PSA-5BW-E, T-PSAE-5BW-E(White) / T-PSA-5BB-E, T-PSAE-5BB-E(Black)			
Air filter, Q'ty				Pocket plastic net x 1(Washable)			
Remote control (option)				Wired:RC-EX3D, RC-E5, RC-ES1 Wireless:RCN-T-5BW-E2, RCN-T-5BB-E2			

SPECIFICATIONS -FDT-

The values are for simultaneous Multi operation.

R410A				Micro Inverter			
Set model name				FDT100VSAPVH	FDT125VSAPVH	FDT140VSAPVH	FDT140VSATVH
				Twin			Triple
Indoor unit				FDT50VH x 2	FDT60VH x 2	FDT71VH x 2	FDT50VH x 3
Outdoor unit				FDC100VSA	FDC125VSA	FDC140VSA	FDC140VSA
Power source				3 Phase 380-415V, 50Hz / 380V, 60Hz			
Nominal cooling capacity (Min - Max)			kW	10.0 (4.0 - 11.2)	12.5 (5.0 - 14.0)	13.6 (5.0 - 14.5)	13.6 (5.0 - 14.5)
Nominal heating capacity (Min - Max)			kW	11.2 (4.0 - 12.5)	14.0 (4.0 - 16.0)	15.5 (4.0 - 16.5)	15.5 (4.0 - 16.5)
Power consumption		Cooling/Heating	kW	2.82 / 2.90	3.79 / 3.31	4.22 / 3.72	4.22 / 3.29
EER/COP		Cooling/Heating		3.55 / 3.86	3.30 / 4.23	3.22 / 4.17	3.22 / 4.71
Inrush current			A	5	5	5	5
Max. current				15	15	15	15
Sound power level*1	Indoor*3	Cooling/Heating	dB(A)	55 / 56	58 / 59	59 / 60	55 / 56
	Outdoor	Cooling/Heating		70 / 70	71 / 71	73 / 73	73 / 73
Sound pressure level*1	Indoor*3	Cooling (P-Hi/Hi/Me/Lo)		41 / 33 / 30 / 26	44 / 34 / 30 / 27	46 / 34 / 31 / 26	41 / 33 / 30 / 26
		Heating (P-Hi/Hi/Me/Lo)		42 / 33 / 28 / 20	44 / 34 / 30 / 23	46 / 34 / 31 / 26	42 / 33 / 28 / 20
	Outdoor	Cooling/Heating		54 / 56	55 / 57	57 / 59	57 / 59
Air flow	Indoor*3	Cooling (P-Hi/Hi/Me/Lo)	m^3/min	22 / 16 / 13 / 10	26 / 17 / 14 / 11	28 / 18 / 15 / 12	22 / 16 / 13 / 10
		Heating (P-Hi/Hi/Me/Lo)		22 / 16 / 13 / 10	26 / 17 / 14 / 11	28 / 18 / 15 / 12	22 / 16 / 13 / 10
	Outdoor	Cooling/Heating		75 / 73	75 / 73	75 / 73	75 / 73
Exterior dimensions	Indoor	HeightxWidthxDepth	mm	Unit: 236 x 840 x 840 Panel: 35 x 950 x 950			
	Outdoor			845 x 970 x 370			
Net weight	Indoor		kg	24(Unit:19 Standard Panel:5)	26(Unit:21 Standard Panel:5)		24(Unit:19 Standard Panel:5)
	Outdoor			82			
Ref.piping size	Liquid/Gas		ømm	9.52(3/8") / 15.88(5/8")			
Refrigerant line (one way) length			m	Max.50			
Vertical height differences		Outdoor is higher/lower	m	Max.50 / Max.15			
Outdoor operating temperature range		Cooling	°CDB	-15 to 50*2			
		Heating	°CWB	-20 to 20			
Panel				T-PSA-5BW-E, T-PSAE-5BW-E(White) / T-PSA-5BB-E, T-PSAE-5BB-E(Black)			
Air filter, Q'ty				Pocket plastic net x 1(Washable)			
Remote control (option)				Wired:RC-EX3D, RC-E5, RC-ES1 Wireless:RCN-T-5BW-E2, RCN-T-5BB-E2			

The values are for simultaneous Multi operation.

R410A				Micro Inverter	
Set model name				FDT200VSAPVH	FDT250VSAPVH
				Twin	
Indoor unit				FDT100VH x 2	FDT125VH x 2
Outdoor unit				FDC200VSA	FDC250VSA
Power source				3 Phase 380-415V, 50Hz / 380V, 60Hz	
Nominal cooling capacity (Min - Max)			kW	19.0 (5.2 - 22.4)	24.0 (6.9 - 28.0)
Nominal heating capacity (Min - Max)			kW	22.4 (3.3 - 25.0)	27.0 (5.5 - 31.5)
Power consumption		Cooling/Heating	kW	6.25 / 6.02	8.36 / 7.15
EER/COP		Cooling/Heating		3.04 / 3.72	2.87 / 3.78
Inrush current			A	5	5
Max. current				20	21
Sound power level*1	Indoor*3	Cooling/Heating	dB(A)	62 / 62	63 / 64
	Outdoor	Cooling/Heating		72 / 74	73 / 75
Sound pressure level*1	Indoor*3	Cooling (P-Hi/Hi/Me/Lo)		47 / 39 / 36 / 30	48 / 41 / 39 / 31
		Heating (P-Hi/Hi/Me/Lo)		47 / 39 / 36 / 29	48 / 41 / 38 / 31
	Outdoor	Cooling/Heating		58 / 59	59 / 62
Air flow	Indoor*3	Cooling (P-Hi/Hi/Me/Lo)	m^3/min	37 / 26 / 23 / 17	38 / 28 / 25 / 18
		Heating (P-Hi/Hi/Me/Lo)		37 / 26 / 23 / 17	38 / 28 / 25 / 18
	Outdoor	Cooling/Heating		135 / 135	143 / 151
Exterior dimensions	Indoor	HeightxWidthxDepth	mm	Unit: 298 x 840 x 840 Panel: 35 x 950 x 950	
	Outdoor			1300 x 970 x 370	1505 x 970 x 370
Net weight	Indoor		kg	30(Unit:25 Standard Panel:5)	
	Outdoor			115	143
Ref.piping size	Liquid/Gas		ømm	9.52(3/8") / 22.22(7/8")	12.7(1/2") / 22.22(7/8")
Refrigerant line (one way) length			m	Max.70	
Vertical height differences		Outdoor is higher/lower	m	Max.30 / Max.15	
Outdoor operating temperature range		Cooling	°CDB	-15 to 50*2	
		Heating	°CWB	-15 to 20	
Panel				T-PSA-5BW-E, T-PSAE-5BW-E(White) / T-PSA-5BB-E, T-PSAE-5BB-E(Black)	
Air filter, Q'ty				Pocket plastic net x 1(Washable)	
Remote control (option)				Wired:RC-EX3D, RC-E5, RC-ES1 Wireless:RCN-T-5BW-E2, RCN-T-5BB-E2	

NOTES:

The data are measured under the following conditions(R32:ISO-T1,-H1 / R410A:ISO-T1).
Cooling:Indoor temp. of 27˚CDB, 19˚CWB, and outdoor temp. of 35˚CDB. Heating:Indoor temp. of 20˚CDB, and outdoor temp. of 7˚CDB, 6˚CWB.
*1 : Indicates the value in an anechoic chamber. During operation these values are somewhat higher due to ambient conditions.
*2 : If a cooling operation is conducted when the outdoor air temperature is –5˚C or lower, the outdoor unit should be installed at a place where it is not influenced by natural wind. If wind blows, the low pressure will drop and compressor frequency will increase, this will cause the capacity to drop and may cause the unit to break down.
*3 : The values are for one indoor unit operation. (Multi system only)

The values are for simultaneous Multi operation.

R410A				Micro Inverter		
Set model name				FDT200VSATVH	FDT200VSADVH	FDT250VSADVH
				Triple	Double Twin	
Indoor unit				FDT71VH x 3	FDT50VH x 4	FDT60VH x 4
Outdoor unit				FDC200VSA	FDC200VSA	FDC250VSA
Power source				3 Phase 380-415V, 50Hz / 380V, 60Hz		
Nominal cooling capacity (Min - Max)			kW	19.0 (5.2 - 22.4)	19.0 (5.2 - 22.4)	24.0 (6.9 - 28.0)
Nominal heating capacity (Min - Max)			kW	22.4 (3.3 - 25.0)	22.4 (3.3 - 25.0)	27.0 (5.5 - 31.5)
Power consumption		Cooling/Heating	kW	6.01 / 5.76	6.26 / 6.15	7.43 / 6.83
EER/COP		Cooling/Heating		3.16 / 3.89	3.04 / 3.64	3.23 / 3.95
Inrush current			A	5	5	5
Max. current				20	20	21
Sound power level*1	Indoor*3	Cooling/Heating	dB(A)	59 / 60	55 / 56	58 / 59
	Outdoor	Cooling/Heating		72 / 74	72 / 74	73 / 75
Sound pressure level*1	Indoor*3	Cooling (P-Hi/Hi/Me/Lo)		46 / 34 / 31 / 26	41 / 33 / 30 / 26	44 / 34 / 30 / 27
		Heating (P-Hi/Hi/Me/Lo)		46 / 34 / 31 / 26	42 / 33 / 28 / 20	44 / 34 / 30 / 23
	Outdoor	Cooling/Heating		58 / 59	58 / 59	59 / 62
Air flow	Indoor*3	Cooling (P-Hi/Hi/Me/Lo)	m^3/min	28 / 18 / 15 / 12	22 / 16 / 13 / 10	26 / 17 / 14 / 11
		Heating (P-Hi/Hi/Me/Lo)		28 / 18 / 15 / 12	22 / 16 / 13 / 10	26 / 17 / 14 / 11
	Outdoor	Cooling/Heating		135 / 135	135 / 135	143 / 151
Exterior dimensions	Indoor	HeightxWidthxDepth	mm	Unit: 236 x 840 x 840 Panel: 35 x 950 x 950		
	Outdoor			1300 x 970 x 370		1505 x 970 x 370
Net weight	Indoor		kg	26(Unit:21 Standard Panel:5)	24(Unit:19 Standard Panel:5)	26(Unit:21 Standard Panel:5)
	Outdoor			115		143
Ref.piping size	Liquid/Gas		ømm	9.52(3/8") / 22.22(7/8")		12.7(1/2") / 22.22(7/8")
Refrigerant line (one way) length			m	Max.70		
Vertical height differences		Outdoor is higher/lower	m	Max.30 / Max.15		
Outdoor operating temperature range		Cooling	°CDB	-15 to 50*2		
		Heating	°CWB	-15 to 20		
Panel				T-PSA-5BW-E, T-PSAE-5BW-E(White) / T-PSA-5BB-E, T-PSAE-5BB-E(Black)		
Air filter, Q'ty				Pocket plastic net x 1(Washable)		
Remote control (option)				Wired:RC-EX3D, RC-E5, RC-ES1 Wireless:RCN-T-5BW-E2, RCN-T-5BB-E2		

R32				Standard Inverter			
Set model name				FDT71VNPWVH	FDT90VNPWVH	FDT100VNPWVH	FDT125VNPWVH
Indoor unit				FDT71VH	FDT100VH	FDT100VH	FDT125VH
Outdoor unit				FDC71VNP-W	FDC90VNP-W	FDC100VNP-W	FDC125VNP-W
Power source				1 Phase 220-240V, 50Hz / 220V, 60Hz			
Nominal cooling capacity (Min - Max)			kW	7.1 (1.5 - 7.3)	9.0 (2.1 - 9.5)	10.0 (2.1 - 10.2)	12.1 (5.0 - 12.1)
Nominal heating capacity (Min - Max)			kW	7.1 (1.1 - 7.3)	9.0 (1.7 - 9.5)	10.0 (1.7 - 10.4)	12.1 (4.0 - 13.3)
Power consumption		Cooling/Heating	kW	2.31 / 1.73	2.48 / 1.90	2.84 / 2.33	3.69 / 3.20
EER/COP		Cooling/Heating		3.07 / 4.10	3.63 / 4.74	3.52 / 4.29	3.28 / 3.78
Inrush current			A	5	5	5	5
Max. current				15.8	19	19	18
Sound power level*1	Indoor	Cooling/Heating	dB(A)	59 / 60	62 / 62	62 / 62	63 / 64
	Outdoor	Cooling/Heating		67 / 67	67 / 66	68 / 67	73 / 72
Sound pressure level*1	Indoor	Cooling (P-Hi/Hi/Me/Lo)		46 / 34 / 31 / 26	47 / 39 / 36 / 30	47 / 39 / 36 / 30	48 / 41 / 39 / 31
		Heating (P-Hi/Hi/Me/Lo)		46 / 34 / 31 / 26	47 / 39 / 36 / 29	47 / 39 / 36 / 29	48 / 41 / 38 / 31
	Outdoor	Cooling/Heating		54 / 54	55 / 53	56 / 54	57 / 57
Air flow	Indoor	Cooling (P-Hi/Hi/Me/Lo)	m^3/min	28 / 18 / 15 / 12	37 / 26 / 23 / 17	36 / 26 / 23 / 17	38 / 28 / 25 / 18
		Heating (P-Hi/Hi/Me/Lo)		28 / 18 / 15 / 12	37 / 26 / 23 / 17	36 / 26 / 23 / 17	38 / 28 / 25 / 18
	Outdoor	Cooling/Heating		42 / 42	59 / 55	63 / 55	75 / 79
Exterior dimensions	Indoor	HeightxWidthxDepth	mm	Unit: 236 x 840 x 840 Panel: 35 x 950 x 950	Unit: 298 x 840 x 840 Panel: 35 x 950 x 950		
	Outdoor			640 x 800(+71) x 290	750 x 880(+88) x 340		845 x 970 x 370
Net weight	Indoor		kg	26(Unit:21 Standard Panel:5)	30(Unit:25 Standard Panel:5)		
	Outdoor			45	57		73
Ref.piping size	Liquid/Gas		ømm	6.35(1/4") / 12.7(1/2")	6.35(1/4") / 15.88(5/8")		9.52(3/8") / 15.88(5/8")
Refrigerant line (one way) length			m	Max.30			
Vertical height differences		Outdoor is higher/lower	m	Max.20 / Max.20			
Outdoor operating temperature range		Cooling	°CDB	-15 to 46*2			
		Heating	°CWB	-15 to 20			
Panel				T-PSA-5BW-E, T-PSAE-5BW-E(White) / T-PSA-5BB-E, T-PSAE-5BB-E(Black)			
Air filter, Q'ty				Pocket Plastic net x1(Washable)			
Remote control (option)				Wired:RC-EX3D, RC-E5, RC-ES1 Wireless:RCN-T-5BW-E2, RCN-T-5BB-E2			

FDTC

Intdoor Unit

Ceiling Cassette -4way Compact



FDTC 40/50/60

Draft Prevention Panel (Option)

A'DESIGN AWARD WINNER 2019 GOLD

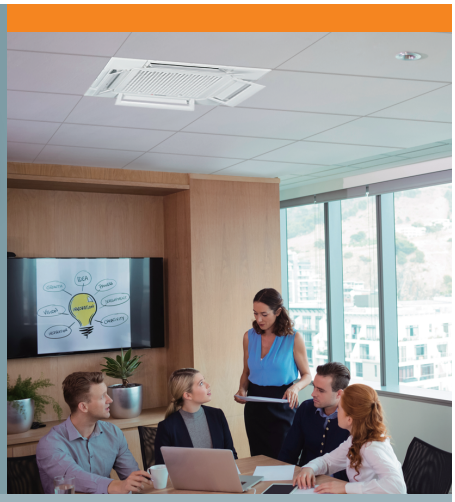

Energy Saving

Home Leave

Hi Power

Silent Operation

Flap Control

Favourite Setting

R410A

R32

Hybrid

Remote control (Option)

Wired



RC-EX3D



RC-E5

New!



RC-ES1

Wireless



RCN-TC-5AW-E3

*Not all functions available with all remote control options.

European Design & Flat Panel

Unique Grille Design

A grille designed with a unique structure and a clean white panel that blends with the room.



Honeycomb type



Grid type

Integrated ceiling system design (600×600)

The weight is 14kg
Height of thin panel and main body is 248mm allowing adequate spacing for installation.





Taking OA (Outside Air) into inside

Fresh air can be taken in without optional parts.
When the fresh air is insufficient, optional parts can be used.

OA Spacer TC-OAS-E2(Option)
Joint Duct TC-OAD-E(Option)

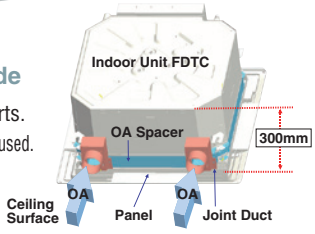

Draft Prevention Panel (Option)

This prevents cold/hot draft being blown directly on the user. It is possible to set Draft Prevention Panel for each air outlet.

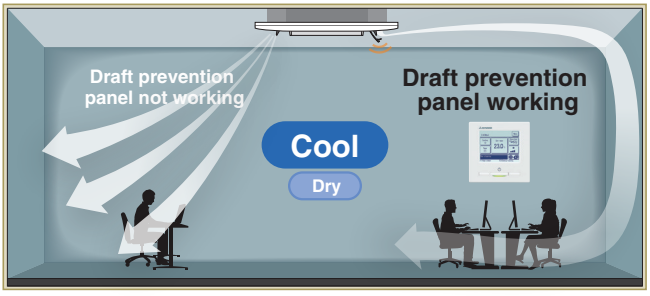

User can position panels by using the remote controller only (RC-EX3D, Wireless kit) when Draft Prevention Panel is available.

Motion Sensor (Option)

Motion sensor is equipped in the corner of the panel and detects the presence/absence and activity of humans in a room to improve the comfort and energy saving performance of the unit.



LB-TC-5W-E

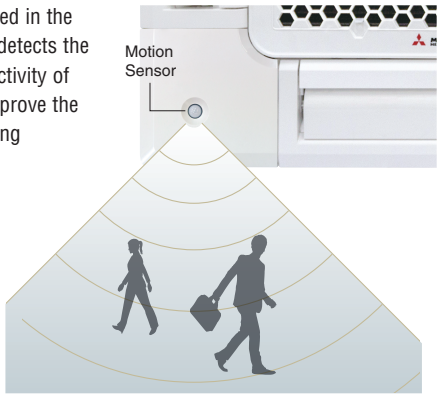

Individual Flap Control System



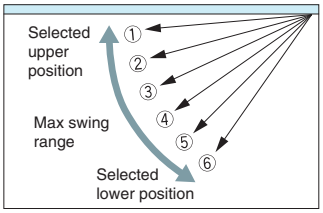

According to room temperature conditions, four directions of air flow can be controlled individually by following Flap control system. Individual flap control is available even after installation.

The flap can swing within the range of upper and lower flap position selected with wired remote control.

* The wireless remote control is not applicable to the Individual flap control system.

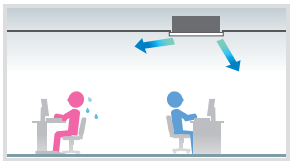
For person who is far from the indoor unit

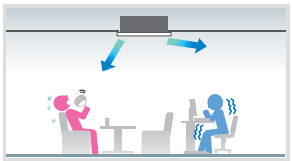
For both persons who are feeling hot or cold

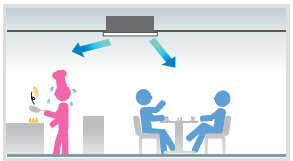
Can cool both the kitchen and the guests

Suitable for High ceilings

The Powerful blowout carries comfortable air flow to the floor even in high ceiling applications. It is ideal for high ceiling offices, stores, etc., with a wide, uniform air flow throughout the room.

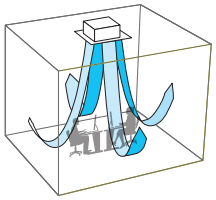

Panel Select Pattern

(Option)

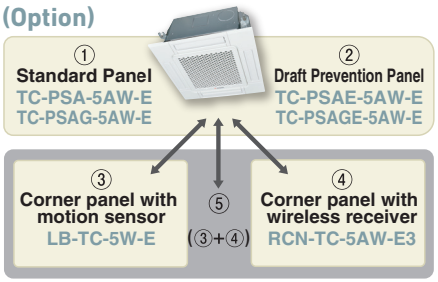

8 patterns of panel are available.

①	Standard Panel only
①+③	Standard Panel with corner panel with motion sensor
①+④	Standard Panel with corner panel with wireless receiver
①+⑤	Standard Panel with corner panel with motion sensor & corner panel with wireless receiver
②	Draft Prevention Panel only
②+③	Draft Prevention Panel with corner panel with motion sensor
②+④	Draft Prevention Panel with corner panel with wireless receiver
②+⑤	Draft Prevention Panel with corner panel with motion sensor & corner panel with wireless receiver

Quieter Operation

Adopting new turbo fan and improving new heat exchanger enables noise reduction.

(Sound Pressure level in the Lo mode)

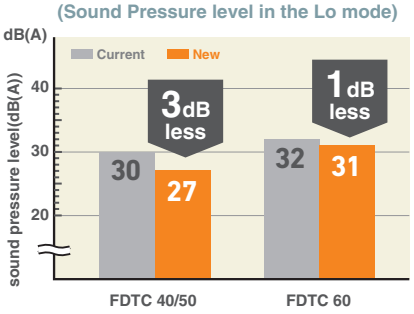

850mm Drain Pump

Drain can be discharged upward by 850mm from the ceiling surface close to the indoor unit.
It allows a piping layout with a high degree of freedom depending on the installation location.

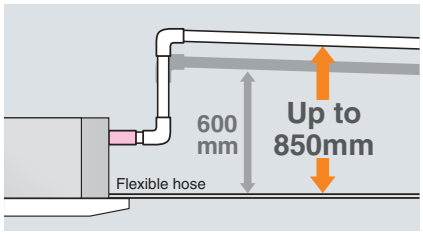

OUTDOOR UNIT

		HyperInverter		
SRC • FDC		40ZSX-W1,50•60ZSX-W3	71VNX-W	100-140VN(S)X-W
		—	—	100-140VN(S)X
model				
Chargeless		15m	30m	
Height x Width x Depth (mm)		640 x 800(+71) x 290	750 x 880(+88) x 340	1300 x 970 x 370

		Micro Inverter		
FDC		100-140VN(S)A-W	—	200•250VSA-W
		100-140VN(S)A	200VSA	250VSA
model				
Chargeless		30m		
Height x Width x Depth (mm)		845 x 970 x 370	1300 x 970 x 370	1505 x 970 x 370

DIMENSIONS (Unit:mm) - FDTC -

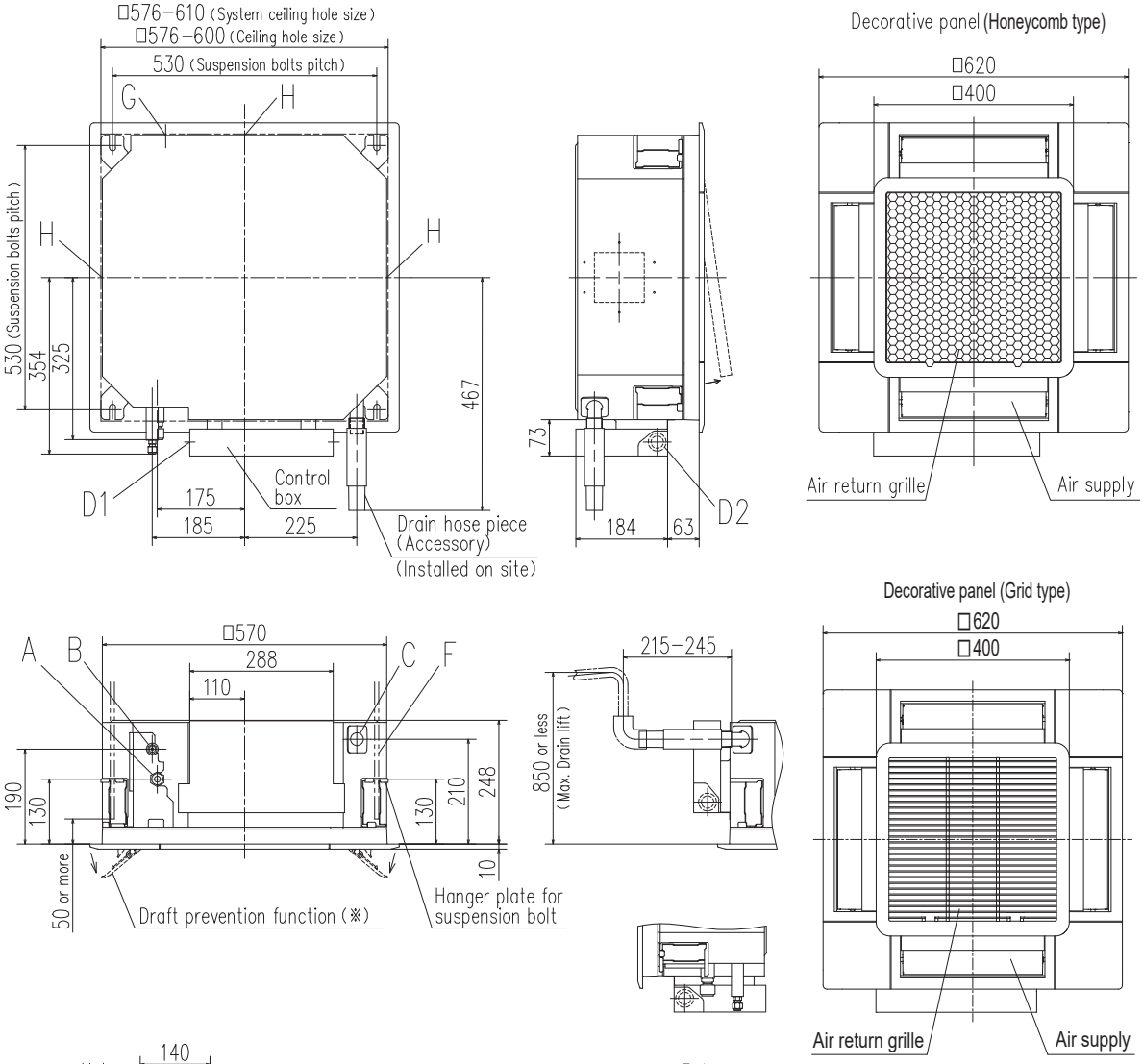

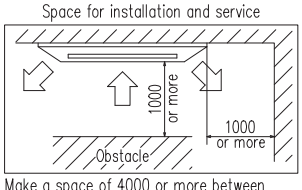

Make a space of 4000 or more between the units when installing more than one.

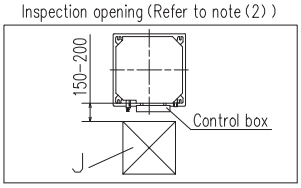

Symbol	Content	
A	Gas piping	ø12.7 (1/2") (Flare)
B	Liquid piping	ø6.35 (1/4") (Flare)
C	Drain piping	VP25 (O.D.32)
D1	Power supply connection	
D2	Remote control code and signal wiring connection	
F	Suspension bolts	(M10 or M8)
G	Outside air opening for ducting	(Knock out)
H	Air outlet opening for ducting	ø125 (Knock out)
J	Inspection opening	450X450

Notes (1) The model name label is attached to the control box lid.
(2) This unit is designed for 2x2 grid ceiling.
If it is installed on a ceiling other than 2x2 grid ceiling, provide an inspection opening on the control box side.
(3) Draft prevention function (※) is provided on the panel TC-PSAE-5AW-E, TC-PSAGE-5AW-E only.

SPECIFICATIONS -FDTC-

R32				Hyper Inverter		
Set model name				FDTC40ZSXW1VH	FDTC50ZSXW3VH	FDTC60ZSXW3VH
Indoor unit				FDTC40VH	FDTC50VH	FDTC60VH
Outdoor unit				SRC40ZSX-W1	SRC50ZSX-W3	SRC60ZSX-W3
Power source				1 Phase 220-240V, 50Hz / 220V, 60Hz		
Nominal cooling capacity (Min - Max)			kW	4.0 (1.1 - 4.7)	5.0 (1.1 - 5.6)	5.6 (1.1 - 6.3)
Nominal heating capacity (Min - Max)			kW	4.5 (0.6 - 5.4)	5.4 (0.6 - 6.3)	6.7 (0.6 - 6.7)
Power consumption		Cooling/Heating	kW	0.98 / 1.13	1.40 / 1.53	1.73 / 2.14
EER/COP		Cooling/Heating		4.08 / 3.98	3.58 / 3.53	3.23 / 3.13
Inrush current			A	5	5	5
Max. current				15	15	15
Sound power level*1	Indoor	Cooling/Heating	dB(A)	59 / 59	59 / 59	60 / 60
	Outdoor	Cooling/Heating		63 / 62	63 / 62	65 / 65
Sound pressure level*1	Indoor	Cooling (P-Hi/Hi/Me/Lo)		44 / 40 / 35 / 27	44 / 40 / 35 / 27	46 / 42 / 38 / 31
		Heating (P-Hi/Hi/Me/Lo)		44 / 40 / 35 / 27	44 / 40 / 35 / 27	46 / 42 / 38 / 31
	Outdoor	Cooling/Heating		52 / 50	52 / 50	53 / 54
Air flow	Indoor	Cooling (P-Hi/Hi/Me/Lo)	m^3/min	13 / 11 / 9 / 7	13 / 11 / 9 / 7	14 / 12 / 10 / 8
		Heating (P-Hi/Hi/Me/Lo)		13 / 11 / 9 / 7	13 / 11 / 9 / 7	14 / 12 / 10 / 8
	Outdoor	Cooling/Heating		33 / 33	39 / 33	41.5 / 39
Exterior dimensions	Indoor	HeightxWidthxDepth	mm	Unit: 248 x 570 x 570 Panel: 10 x 620 x 620		
	Outdoor			640 x 800(+71) x 290		
Net weight	Indoor		kg	16.5(Unit:14 Standard Panel:2.5)		
	Outdoor			45		
Ref.piping size	Liquid/Gas		ømm	6.35(1/4") / 12.7(1/2")		
Refrigerant line (one way) length			m	Max.30		
Vertical height differences		Outdoor is higher/lower	m	Max.20 / Max.20		
Outdoor operating temperature range		Cooling	°CDB	-15 to 46*2		
		Heating	°CWB	-20 to 20		
Panel				TC-PSA-5AW-E, TC-PSAE-5AW-E(Honeycomb) / TC-PSAG-5AW-E, TC-PSAGE-5AW-E(Grid)		
Air filter, Q'ty				Pocket plastic net x 1(Washable)		
Remote control (option)				Wired:RC-EX3D, RC-E5, RC-ES1 Wireless:RCN-TC-5AW-E3		

The values are for simultaneous Multi operation.

R32				Hyper Inverter			
Set model name				FDTC71VNXWPVH	FDTC100VNXWPVH	FDTC125VNXWPVH	FDTC140VNXWTVH
					Twin		Triple
Indoor unit				FDTC40VH x 2	FDTC50VH x 2	FDTC60VH x 2	FDTC50VH x 3
Outdoor unit				FDC71VNX-W	FDC100VNX-W	FDC125VNX-W	FDC140VNX-W
Power source				1 Phase 220-240V, 50Hz / 220V, 60Hz			
Nominal cooling capacity (Min - Max)			kW	7.1 (3.2 - 8.0)	10.0 (3.5 - 11.2)	12.5 (3.5 - 14.0)	14.0 (3.5 - 16.0)
Nominal heating capacity (Min - Max)			kW	8.0 (3.6 - 9.0)	11.2 (2.7 - 12.5)	14.0 (2.7 - 17.0)	16.0 (2.7 - 18.0)
Power consumption		Cooling/Heating	kW	1.73 / 1.83	2.60 / 3.04	3.67 / 4.05	3.96 / 4.34
EER/COP		Cooling/Heating		4.12 / 4.37	3.84 / 3.69	3.41 / 3.45	3.54 / 3.69
Inrush current			A	5	5	5	5
Max. current				19.1	25	27	27
Sound power level*1	Indoor*3	Cooling/Heating	dB(A)	59 / 59	59 / 59	60 / 60	59 / 59
	Outdoor	Cooling/Heating		66 / 66	67 / 67	68 / 70	69 / 71
Sound pressure level*1	Indoor*3	Cooling (P-Hi/Hi/Me/Lo)		44 / 40 / 35 / 27	44 / 40 / 35 / 27	46 / 42 / 38 / 31	44 / 40 / 35 / 27
		Heating (P-Hi/Hi/Me/Lo)		44 / 40 / 35 / 27	44 / 40 / 35 / 27	46 / 42 / 38 / 31	44 / 40 / 35 / 27
	Outdoor	Cooling/Heating		51 / 51	53 / 51	53 / 54	54 / 54
Air flow	Indoor*3	Cooling (P-Hi/Hi/Me/Lo)	m^3/min	13 / 11 / 9 / 7	13 / 11 / 9 / 7	14 / 12 / 10 / 8	13 / 11 / 9 / 7
		Heating (P-Hi/Hi/Me/Lo)		13 / 11 / 9 / 7	13 / 11 / 9 / 7	14 / 12 / 10 / 8	13 / 11 / 9 / 7
	Outdoor	Cooling/Heating		60 / 50	100 / 100	100 / 100	100 / 100
Exterior dimensions	Indoor	HeightxWidthxDepth	mm	Unit: 248 x 570 x 570 Panel: 10 x 620 x 620			
	Outdoor			750 x 880(+88) x 340	1300 x 970 x 370		
Net weight	Indoor		kg	16.5(Unit:14 Standard Panel:2.5)			
	Outdoor			60	97		
Ref.piping size	Liquid/Gas		ømm	9.52(3/8") / 15.88(5/8")			
Refrigerant line (one way) length			m	Max.50	Max.100		
Vertical height differences		Outdoor is higher/lower	m	Max.30 / Max.15	Max.50 / Max.15		
Outdoor operating temperature range		Cooling	°CDB	-15 to 50*2			
		Heating	°CWB	-20 to 20			
Panel				TC-PSA-5AW-E, TC-PSAE-5AW-E(Honeycomb) / TC-PSAG-5AW-E, TC-PSAGE-5AW-E(Grid)			
Air filter, Q'ty				Pocket plastic net x 1(Washable)			
Remote control (option)				Wired:RC-EX3D, RC-E5, RC-ES1 Wireless:RCN-TC-5AW-E3			

NOTES:

The data are measured under the following conditions(ISO-T1, -H1).
Cooling:Indoor temp. of 27°CDB, 19°CWB, and outdoor temp. of 35°CDB. Heating:Indoor temp. of 20°CDB, and outdoor temp. of 7°CDB, 6°CWB.
*1 : Indicates the value in an anechoic chamber. During operation these values are somewhat higher due to ambient conditions.
*2 : If a cooling operation is conducted when the outdoor air temperature is –5°C or lower, the outdoor unit should be installed at a place where it is not influenced by natural wind. If wind blows, the low pressure will drop and compressor frequency will increase, this will cause the capacity to drop and may cause the unit to break down.
*3 : The values are for one indoor unit operation. (Multi system only)

SPECIFICATIONS -FDTC-

The values are for simultaneous Multi operation.

R32				Hyper Inverter		
Set model name				FDTC100VSXWPVH	FDTC125VSXWPVH	FDTC140VSXWTVH
				Twin		Triple
Indoor unit				FDTC50VH x 2	FDTC60VH x 2	FDTC50VH x 3
Outdoor unit				FDC100VSX-W	FDC125VSX-W	FDC140VSX-W
Power source				3 Phase 380-415V, 50Hz / 380V, 60Hz		
Nominal cooling capacity (Min - Max)			kW	10.0 (3.5 - 11.2)	12.5 (3.5 - 14.0)	14.0 (3.5 - 16.0)
Nominal heating capacity (Min - Max)			kW	11.2 (2.7 - 16.0)	14.0 (2.7 - 18.0)	16.0 (2.7 - 20.0)
Power consumption		Cooling/Heating	kW	2.60 / 3.04	3.67 / 4.05	3.96 / 4.34
EER/COP		Cooling/Heating		3.84 / 3.69	3.41 / 3.45	3.54 / 3.69
Inrush current			A	5	5	5
Max. current				14	14	14
Sound power level*1	Indoor*3	Cooling/Heating	dB(A)	59 / 59	60 / 60	59 / 59
	Outdoor	Cooling/Heating		67 / 67	68 / 70	69 / 71
Sound pressure level*1	Indoor*3	Cooling (P-Hi/Hi/Me/Lo)		44 / 40 / 35 / 27	46 / 42 / 38 / 31	44 / 40 / 35 / 27
		Heating (P-Hi/Hi/Me/Lo)		44 / 40 / 35 / 27	46 / 42 / 38 / 31	44 / 40 / 35 / 27
	Outdoor	Cooling/Heating		53 / 51	53 / 54	54 / 54
Air flow	Indoor*3	Cooling (P-Hi/Hi/Me/Lo)	m^3/min	13 / 11 / 9 / 7	14 / 12 / 10 / 8	13 / 11 / 9 / 7
		Heating (P-Hi/Hi/Me/Lo)		13 / 11 / 9 / 7	14 / 12 / 10 / 8	13 / 11 / 9 / 7
	Outdoor	Cooling/Heating		100 / 100	100 / 100	100 / 100
Exterior dimensions	Indoor	HeightxWidthxDepth	mm	Unit: 248 x 570 x 570 Panel: 10 x 620 x 620		
	Outdoor			1300 x 970 x 370		
Net weight	Indoor		kg	16.5(Unit:14 Standard Panel:2.5)		
	Outdoor			99		
Ref.piping size	Liquid/Gas		ømm	9.52(3/8") / 15.88(5/8")		
Refrigerant line (one way) length			m	Max.100		
Vertical height differences		Outdoor is higher/lower	m	Max.50 / Max.15		
Outdoor operating temperature range		Cooling	°CDB	-15 to 50*2		
		Heating	°CWB	-20 to 20		
Panel				TC-PSA-5AW-E, TC-PSAE-5AW-E(Honeycomb) / TC-PSAG-5AW-E, TC-PSAGE-5AW-E(Grid)		
Air filter, Q'ty				Pocket plastic net x 1(Washable)		
Remote control (option)				Wired:RC-EX3D, RC-E5, RC-ES1 Wireless:RCN-TC-5AW-E3		

The values are for simultaneous Multi operation.

R410A				Hyper Inverter		
Set model name				FDTC100VNXPVH	FDTC125VNXPVH	FDTC140VNXTVH
				Twin		Triple
Indoor unit				FDTC50VH x 2	FDTC60VH x 2	FDTC50VH x 3
Outdoor unit				FDC100VNX	FDC125VNX	FDC140VNX
Power source				1 Phase 220-240V, 50Hz / 220V, 60Hz		
Nominal cooling capacity (Min - Max)			kW	10.0 (4.0 - 11.2)	12.5 (5.0 - 14.0)	14.0 (5.0 - 16.0)
Nominal heating capacity (Min - Max)			kW	11.2 (4.0 - 12.5)	14.0 (4.0 - 17.0)	16.0 (4.0 - 18.0)
Power consumption		Cooling/Heating	kW	2.80 / 3.50	4.10 / 4.10	4.20 / 4.34
EER/COP		Cooling/Heating		3.57 / 3.20	3.05 / 3.41	3.33 / 3.69
Inrush current			A	5	5	5
Max. current				24	24	26
Sound power level*1	Indoor*3	Cooling/Heating	dB(A)	59 / 59	60 / 60	59 / 59
	Outdoor	Cooling/Heating		70 / 70	70 / 70	72 / 72
Sound pressure level*1	Indoor*3	Cooling (P-Hi/Hi/Me/Lo)		44 / 40 / 35 / 27	46 / 42 / 38 / 31	44 / 40 / 35 / 27
		Heating (P-Hi/Hi/Me/Lo)		44 / 40 / 35 / 27	46 / 42 / 38 / 31	44 / 40 / 35 / 27
	Outdoor	Cooling/Heating		48 / 50	48 / 50	49 / 52
Air flow	Indoor*3	Cooling (P-Hi/Hi/Me/Lo)	m^3/min	13 / 11 / 9 / 7	14 / 12 / 10 / 8	13 / 11 / 9 / 7
		Heating (P-Hi/Hi/Me/Lo)		13 / 11 / 9 / 7	14 / 12 / 10 / 8	13 / 11 / 9 / 7
	Outdoor	Cooling/Heating		100 / 100	100 / 100	100 / 100
Exterior dimensions	Indoor	HeightxWidthxDepth	mm	Unit: 248 x 570 x 570 Panel: 10 x 620 x 620		
	Outdoor			1300 x 970 x 370		
Net weight	Indoor		kg	16.5(Unit:14 Standard Panel:2.5)		
	Outdoor			105		
Ref.piping size	Liquid/Gas		ømm	9.52(3/8") / 15.88(5/8")		
Refrigerant line (one way) length			m	Max.100		
Vertical height differences		Outdoor is higher/lower	m	Max.30 / Max.15		
Outdoor operating temperature range		Cooling	°CDB	-15 to 43*2		
		Heating	°CWB	-20 to 20		
Panel				TC-PSA-5AW-E, TC-PSAE-5AW-E(Honeycomb) / TC-PSAG-5AW-E, TC-PSAGE-5AW-E(Grid)		
Air filter, Q'ty				Pocket plastic net x 1(Washable)		
Remote control (option)				Wired:RC-EX3D, RC-E5, RC-ES1 Wireless:RCN-TC-5AW-E3		

NOTES:

The data are measured under the following conditions(R32 : ISO-T1, -H1 / R410A : ISO-T1).
Cooling:Indoor temp. of 27°CDB, 19°CWB, and outdoor temp. of 35°CDB. Heating:Indoor temp. of 20°CDB, and outdoor temp. of 7°CDB, 6°CWB.
*1 : Indicates the value in an anechoic chamber. During operation these values are somewhat higher due to ambient conditions.
*2 : If a cooling operation is conducted when the outdoor air temperature is –5°C or lower, the outdoor unit should be installed at a place where it is not influenced by natural wind. If wind blows, the low pressure will drop and compressor frequency will increase, this will cause the capacity to drop and may cause the unit to break down.
*3 : The values are for one indoor unit operation. (Multi system only)

The values are for simultaneous Multi operation.

R410A				Hyper Inverter		
Set model name				FDTC100VSXPVH	FDTC125VSXPVH	FDTC140VSXTVH
				Twin		Triple
Indoor unit				FDTC50VH x 2	FDTC60VH x 2	FDTC50VH x 3
Outdoor unit				FDC100VSX	FDC125VSX	FDC140VSX
Power source				3 Phase 380-415V, 50Hz / 380V, 60Hz		
Nominal cooling capacity (Min - Max)			kW	10.0 (4.0 - 11.2)	12.5 (5.0 - 14.0)	14.0 (5.0 - 16.0)
Nominal heating capacity (Min - Max)			kW	11.2 (4.0 - 16.0)	14.0 (4.0 - 18.0)	16.0 (4.0 - 20.0)
Power consumption		Cooling/Heating	kW	2.80 / 3.50	4.10 / 4.10	4.20 / 4.34
EER/COP		Cooling/Heating		3.57 / 3.20	3.05 / 3.41	3.33 / 3.69
Inrush current			A	5	5	5
Max. current				15	15	15
Sound power level*1	Indoor*3	Cooling/Heating	dB(A)	59 / 59	60 / 60	59 / 59
	Outdoor	Cooling/Heating		70 / 70	70 / 70	72 / 72
Sound pressure level*1	Indoor*3	Cooling (P-Hi/Hi/Me/Lo)		44 / 40 / 35 / 27	46 / 42 / 38 / 31	44 / 40 / 35 / 27
		Heating (P-Hi/Hi/Me/Lo)		44 / 40 / 35 / 27	46 / 42 / 38 / 31	44 / 40 / 35 / 27
	Outdoor	Cooling/Heating		48 / 50	48 / 50	49 / 52
Air flow	Indoor*3	Cooling (P-Hi/Hi/Me/Lo)	m^3/min	13 / 11 / 9 / 7	14 / 12 / 10 / 8	13 / 11 / 9 / 7
		Heating (P-Hi/Hi/Me/Lo)		13 / 11 / 9 / 7	14 / 12 / 10 / 8	13 / 11 / 9 / 7
	Outdoor	Cooling/Heating		100 / 100	100 / 100	100 / 100
Exterior dimensions	Indoor	HeightxWidthxDepth	mm	Unit: 248 x 570 x 570 Panel: 10 x 620 x 620		
	Outdoor			1300 x 970 x 370		
Net weight	Indoor		kg	16.5(Unit:14 Standard Panel:2.5)		
	Outdoor			105		
Ref.piping size	Liquid/Gas		ømm	9.52(3/8") / 15.88(5/8")		
Refrigerant line (one way) length			m	Max.100		
Vertical height differences		Outdoor is higher/lower	m	Max.30 / Max.15		
Outdoor operating temperature range		Cooling	°CDB	-15 to 43*2		
		Heating	°CWB	-20 to 20		
Panel				TC-PSA-5AW-E, TC-PSAE-5AW-E(Honeycomb) / TC-PSAG-5AW-E, TC-PSAGE-5AW-E(Grid)		
Air filter, Q'ty				Pocket plastic net x 1(Washable)		
Remote control (option)				Wired:RC-EX3D, RC-E5, RC-ES1 Wireless:RCN-TC-5AW-E3		

The values are for simultaneous Multi operation.

R32				Micro Inverter		
Set model name				FDTC100VNAWPVH	FDTC125VNAWPVH	FDTC140VNAWTVH
				Twin		Triple
Indoor unit				FDTC50VH x 2	FDTC60VH x 2	FDTC50VH x 3
Outdoor unit				FDC100VNA-W	FDC125VNA-W	FDC140VNA-W
Power source				1 Phase 220-240V, 50Hz / 220V, 60Hz		
Nominal cooling capacity (Min - Max)			kW	10.0 (4.0 - 11.2)	12.5 (5.0 - 14.0)	13.6 (5.0 - 14.5)
Nominal heating capacity (Min - Max)			kW	11.2 (4.0 - 12.5)	14.0 (4.0 - 16.0)	15.5 (4.0 - 16.5)
Power consumption		Cooling/Heating	kW	3.15 / 3.05	4.90 / 4.30	4.75 / 4.60
EER/COP		Cooling/Heating		3.17 / 3.67	2.55 / 3.26	2.86 / 3.37
Inrush current			A	5	5	5
Max. current				24	24	24
Sound power level*1	Indoor*3	Cooling/Heating	dB(A)	59 / 59	60 / 60	59 / 59
	Outdoor	Cooling/Heating		69 / 70	71 / 71	72 / 73
Sound pressure level*1	Indoor*3	Cooling (P-Hi/Hi/Me/Lo)		44 / 40 / 35 / 27	46 / 42 / 38 / 31	44 / 40 / 35 / 27
		Heating (P-Hi/Hi/Me/Lo)		44 / 40 / 35 / 27	46 / 42 / 38 / 31	44 / 40 / 35 / 27
	Outdoor	Cooling/Heating		54 / 55	54 / 56	56 / 58
Air flow	Indoor*3	Cooling (P-Hi/Hi/Me/Lo)	m^3/min	13 / 11 / 9 / 7	14 / 12 / 10 / 8	13 / 11 / 9 / 7
		Heating (P-Hi/Hi/Me/Lo)		13 / 11 / 9 / 7	14 / 12 / 10 / 8	13 / 11 / 9 / 7
	Outdoor	Cooling/Heating		75 / 73	75 / 73	75 / 73
Exterior dimensions	Indoor	HeightxWidthxDepth	mm	Unit: 248 x 570 x 570 Panel: 10 x 620 x 620		
	Outdoor			845 x 970 x 370		
Net weight	Indoor		kg	16.5(Unit:14 Standard Panel:2.5)		
	Outdoor			77		
Ref.piping size	Liquid/Gas		ømm	9.52(3/8") / 15.88(5/8")		
Refrigerant line (one way) length			m	Max.50		
Vertical height differences		Outdoor is higher/lower	m	Max.50 / Max.15		
Outdoor operating temperature range		Cooling	°CDB	-15 to 50*2		
		Heating	°CWB	-20 to 20		
Panel				TC-PSA-5AW-E, TC-PSAE-5AW-E(Honeycomb) / TC-PSAG-5AW-E, TC-PSAGE-5AW-E(Grid)		
Air filter, Q'ty				Pocket plastic net x 1(Washable)		
Remote control (option)				Wired:RC-EX3D, RC-E5, RC-ES1 Wireless:RCN-TC-5AW-E3		

SPECIFICATIONS -FDTC-

The values are for simultaneous Multi operation.

R32				Micro Inverter				
Set model name				FDTC100VSAWPVH	FDTC125VSAWPVH	FDTC140VSAWTVH	FDTC200VSAWDVH	FDTC250VSAWDVH
				Twin		Triple	Double Twin	
Indoor unit				FDTC50VH x 2	FDTC60VH x 2	FDTC50VH x 3	FDTC50VH x 4	FDTC60VH x 4
Outdoor unit				FDC100VSA-W	FDC125VSA-W	FDC140VSA-W	FDC200VSA-W	FDC250VSA-W
Power source				3 Phase 380-415V, 50Hz / 380V, 60Hz				
Nominal cooling capacity (Min - Max)			kW	10.0 (4.0 - 11.2)	12.5 (5.0 - 14.0)	13.6 (5.0 - 14.5)	20.0 (7.1 - 22.4)	25.0 (7.1 - 28.0)
Nominal heating capacity (Min - Max)			kW	11.2 (4.0 - 12.5)	14.0 (4.0 - 16.0)	15.5 (4.0 - 16.5)	22.4 (6.6 - 25.0)	28.0 (5.2 - 31.5)
Power consumption		Cooling/Heating	kW	3.15 / 3.05	4.90 / 4.30	4.75 / 4.60	6.92 / 6.37	9.43 / 8.75
EER/COP		Cooling/Heating		3.17 / 3.67	2.55 / 3.26	2.86 / 3.37	2.89 / 3.52	2.65 / 3.20
Inrush current			A	5	5	5	5	5
Max. current				15	15	15	19	20
Sound power level*1	Indoor*3	Cooling/Heating	dB(A)	59 / 59	60 / 60	59 / 59	59 / 59	60 / 60
	Outdoor	Cooling/Heating		69 / 70	71 / 71	72 / 73	72 / 74	73 / 75
Sound pressure level*1	Indoor*3	Cooling (P-Hi/Hi/Me/Lo)		44 / 40 / 35 / 27	46 / 42 / 38 / 31	44 / 40 / 35 / 27	44 / 40 / 35 / 27	46 / 42 / 38 / 31
		Heating (P-Hi/Hi/Me/Lo)		44 / 40 / 35 / 27	46 / 42 / 38 / 31	44 / 40 / 35 / 27	44 / 40 / 35 / 27	46 / 42 / 38 / 31
	Outdoor	Cooling/Heating		54 / 55	54 / 56	56 / 58	58 / 59	58 / 62
Air flow	Indoor*3	Cooling (P-Hi/Hi/Me/Lo)	m^3/min	13 / 11 / 9 / 7	14 / 12 / 10 / 8	13 / 11 / 9 / 7	13 / 11 / 9 / 7	14 / 12 / 10 / 8
		Heating (P-Hi/Hi/Me/Lo)		13 / 11 / 9 / 7	14 / 12 / 10 / 8	13 / 11 / 9 / 7	13 / 11 / 9 / 7	14 / 12 / 10 / 8
	Outdoor	Cooling/Heating		75 / 73	75 / 73	75 / 73	148 / 134	148 / 153
Exterior dimensions	Indoor	HeightxWidthxDepth	mm	Unit: 248 x 570 x 570 Panel: 10 x 620 x 620				
	Outdoor			845 x 970 x 370			1505 x 970 x 370	
Net weight	Indoor		kg	16.5(Unit:14 Standard Panel:2.5)				
	Outdoor			78			144	145
Ref.piping size	Liquid/Gas		ømm	9.52(3/8") / 15.88(5/8")			9.52(3/8") / 22.22(7/8")	12.7(1/2") / 22.22(7/8")
Refrigerant line (one way) length			m	Max.50			Max.70	
Vertical height differences		Outdoor is higher/lower	m	Max.50 / Max.15			Max.50*4 / Max.15	
Outdoor operating temperature range		Cooling	°CDB	-15 to 50*2				
		Heating	°CWB	-20 to 20				
Panel				TC-PSA-5AW-E, TC-PSAE-5AW-E(Honeycomb) / TC-PSAG-5AW-E, TC-PSAGE-5AW-E(Grid)				
Air filter, Q'ty				Pocket plastic net x 1(Washable)				
Remote control (option)				Wired:RC-EX3D, RC-E5, RC-ES1 Wireless:RCN-TC-5AW-E3				

The values are for simultaneous Multi operation.

R410A				Micro Inverter		
Set model name				FDTC100VNAPVH	FDTC125VNAPVH	FDTC140VNATVH
				Twin		Triple
Indoor unit				FDTC50VH x 2	FDTC60VH x 2	FDTC50VH x 3
Outdoor unit				FDC100VNA	FDC125VNA	FDC140VNA
Power source				1 Phase 220-240V, 50Hz / 220V, 60Hz		
Nominal cooling capacity (Min - Max)			kW	10.0 (4.0 - 11.2)	12.5 (5.0 - 14.0)	13.6 (5.0 - 14.5)
Nominal heating capacity (Min - Max)			kW	11.2 (4.0 - 12.5)	14.0 (4.0 - 16.0)	15.5 (4.0 - 16.5)
Power consumption		Cooling/Heating	kW	3.30 / 3.15	4.90 / 4.50	4.75 / 4.60
EER/COP		Cooling/Heating		3.03 / 3.56	2.55 / 3.11	2.86 / 3.37
Inrush current			A	5	5	5
Max. current				25	25	25
Sound power level*1	Indoor*3	Cooling/Heating	dB(A)	59 / 59	60 / 60	59 / 59
	Outdoor	Cooling/Heating		70 / 70	71 / 71	73 / 73
Sound pressure level*1	Indoor*3	Cooling (P-Hi/Hi/Me/Lo)		44 / 40 / 35 / 27	46 / 42 / 38 / 31	44 / 40 / 35 / 27
		Heating (P-Hi/Hi/Me/Lo)		44 / 40 / 35 / 27	46 / 42 / 38 / 31	44 / 40 / 35 / 27
	Outdoor	Cooling/Heating		54 / 56	55 / 57	57 / 59
Air flow	Indoor*3	Cooling (P-Hi/Hi/Me/Lo)	m^3/min	13 / 11 / 9 / 7	14 / 12 / 10 / 8	13 / 11 / 9 / 7
		Heating (P-Hi/Hi/Me/Lo)		13 / 11 / 9 / 7	14 / 12 / 10 / 8	13 / 11 / 9 / 7
	Outdoor	Cooling/Heating		75 / 73	75 / 73	75 / 73
Exterior dimensions	Indoor	HeightxWidthxDepth	mm	Unit: 248 x 570 x 570 Panel: 10 x 620 x 620		
	Outdoor			845 x 970 x 370		
Net weight	Indoor		kg	16.5(Unit:14 Standard Panel:2.5)		
	Outdoor			80		
Ref.piping size	Liquid/Gas		ømm	9.52(3/8") / 15.88(5/8")		
Refrigerant line (one way) length			m	Max.50		
Vertical height differences		Outdoor is higher/lower	m	Max.50 / Max.15		
Outdoor operating temperature range		Cooling	°CDB	-15 to 50*2		
		Heating	°CWB	-20 to 20		
Panel				TC-PSA-5AW-E, TC-PSAE-5AW-E(Honeycomb) / TC-PSAG-5AW-E, TC-PSAGE-5AW-E(Grid)		
Air filter, Q'ty				Pocket plastic net x 1(Washable)		
Remote control (option)				Wired:RC-EX3D, RC-E5, RC-ES1 Wireless:RCN-TC-5AW-E3		

NOTES:

The data are measured under the following conditions(R32 : ISO-T1, -H1 / R410A : ISO-T1).
Cooling:Indoor temp. of 27°CDB, 19°CWB, and outdoor temp. of 35°CDB. Heating:Indoor temp. of 20°CDB, and outdoor temp. of 7°CDB, 6°CWB.
*1 : Indicates the value in an anechoic chamber. During operation these values are somewhat higher due to ambient conditions.
*2 : If a cooling operation is conducted when the outdoor air temperature is –5°C or lower, the outdoor unit should be installed at a place where it is not influenced by natural wind. If wind blows, the low pressure will drop and compressor frequency will increase, this will cause the capacity to drop and may cause the unit to break down.
*3 : The values are for one indoor unit operation. (Multi system only)
*4 : In case of following conditions:Max.50m(Outdoor unit is higher & Outdoor temperature ≦ 43°C), Max.30m(Outdoor unit is higher & Outdoor temperature > 43°C)

The values are for simultaneous Multi operation.

R410A				Micro Inverter				
Set model name				FDTC100VSAPVH	FDTC125VSAPVH	FDTC140VSATVH	FDTC200VSADVH	FDTC250VSADVH
				Twin		Triple	Double Twin	
Indoor unit				FDTC50VH x 2	FDTC60VH x 2	FDTC50VH x 3	FDTC50VH x 4	FDTC60VH x 4
Outdoor unit				FDC100VSA	FDC125VSA	FDC140VSA	FDC200VSA	FDC250VSA
Power source				3 Phase 380-415V, 50Hz / 380V, 60Hz				
Nominal cooling capacity (Min - Max)			kW	10.0 (4.0 - 11.2)	12.5 (5.0 - 14.0)	13.6 (5.0 - 14.5)	19.0 (5.2 - 22.4)	24.0 (6.9 - 28.0)
Nominal heating capacity (Min - Max)			kW	11.2 (4.0 - 12.5)	14.0 (4.0 - 16.0)	15.5 (4.0 - 16.5)	22.4 (3.3 - 25.0)	27.0 (5.5 - 31.5)
Power consumption		Cooling/Heating	kW	3.30 / 3.15	4.90 / 4.50	4.75 / 4.60	6.95 / 6.79	10.65 / 8.20
EER/COP		Cooling/Heating		3.03 / 3.56	2.55 / 3.11	2.86 / 3.37	2.73 / 3.30	2.25 / 3.29
Inrush current			A	5	5	5	5	5
Max. current				15	15	15	20	21
Sound power level*1	Indoor*3	Cooling/Heating	dB(A)	59 / 59	60 / 60	59 / 59	59 / 59	60 / 60
	Outdoor	Cooling/Heating		70 / 70	71 / 71	73 / 73	72 / 74	75 / 75
Sound pressure level*1	Indoor*3	Cooling (P-Hi/Hi/Me/Lo)		44 / 40 / 35 / 27	46 / 42 / 38 / 31	44 / 40 / 35 / 27	44 / 40 / 35 / 27	46 / 42 / 38 / 31
		Heating (P-Hi/Hi/Me/Lo)		44 / 40 / 35 / 27	46 / 42 / 38 / 31	44 / 40 / 35 / 27	44 / 40 / 35 / 27	46 / 42 / 38 / 31
	Outdoor	Cooling/Heating		54 / 56	55 / 57	57 / 59	58 / 59	61 / 62
Air flow	Indoor*3	Cooling (P-Hi/Hi/Me/Lo)	m^3/min	13 / 11 / 9 / 7	14 / 12 / 10 / 8	13 / 11 / 9 / 7	13 / 11 / 9 / 7	14 / 12 / 10 / 8
		Heating (P-Hi/Hi/Me/Lo)		13 / 11 / 9 / 7	14 / 12 / 10 / 8	13 / 11 / 9 / 7	13 / 11 / 9 / 7	14 / 12 / 10 / 8
	Outdoor	Cooling/Heating		75 / 73	75 / 73	75 / 73	135 / 135	143 / 151
Exterior dimensions	Indoor	HeightxWidthxDepth	mm	Unit: 248 x 570 x 570 Panel: 10 x 620 x 620				
	Outdoor			845 x 970 x 370			1300 x 970 x 370	1505 x 970 x 370
Net weight	Indoor		kg	16.5(Unit:14 Standard Panel:2.5)				
	Outdoor			82			115	143
Ref.piping size	Liquid/Gas		ømm	9.52(3/8") / 15.88(5/8")			9.52(3/8") / 22.22(7/8")	12.7(1/2") / 22.22(7/8")
Refrigerant line (one way) length			m	Max.50			Max.70	
Vertical height differences		Outdoor is higher/lower	m	Max.50 / Max.15			Max.30 / Max.15	
Outdoor operating temperature range		Cooling	°CDB	-15 to 50*2				
		Heating	°CWB	-20 to 20			-15 to 20	
Panel				TC-PSA-5AW-E, TC-PSAE-5AW-E(Honeycomb) / TC-PSAG-5AW-E, TC-PSAGE-5AW-E(Grid)				
Air filter, Q'ty				Pocket plastic net x 1(Washable)				
Remote control (option)				Wired:RC-EX3D, RC-E5, RC-ES1 Wireless:RCN-TC-5AW-E3				

FDU

Intdoor Unit

Duct Connected -High Static pressure-



FDU 71/100/125/140

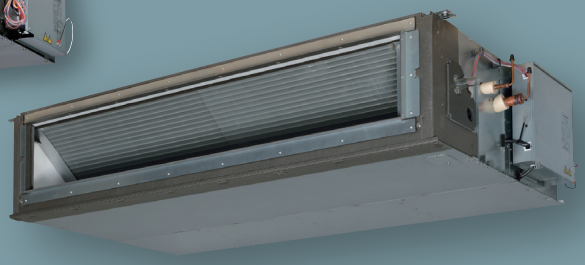

FDU 200/250/280

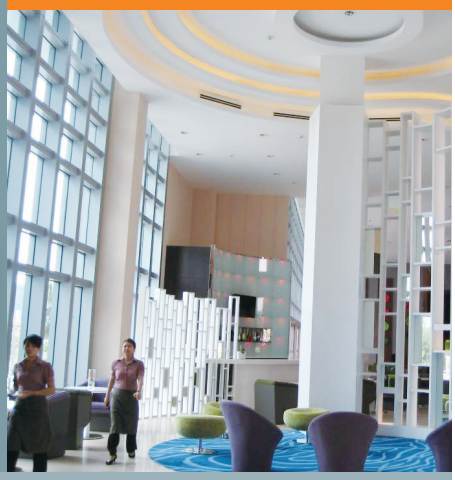

Energy Saving

Automatic Operation

Silent Operation

Hi Power

Weekly/ Sleep/ Peak-Cut Timer

Self-Diagnostics

R410A R32 Hybrid

Remote control (Option)

Wired



RC-EX3D
RC-EXZ3D



RC-E5

New!



RC-ES1

Wireless



RCN-KIT4-E2

*Not all functions available with all remote control options.

External Static Pressure (E.S.P.) Control

The External Static Pressure (E.S.P.) can be manually set on the wired remote controller. Indoor unit will control the fan speed to keep rated air flow volume at each fan speed setting. You can set required E.S.P. by wired remote controller, calculated with the set air flow rate and the pressure loss of the duct.

RC-E5

E.S.P. button

External Static Pressure (E.S.P.) can be set by E.S.P. button.



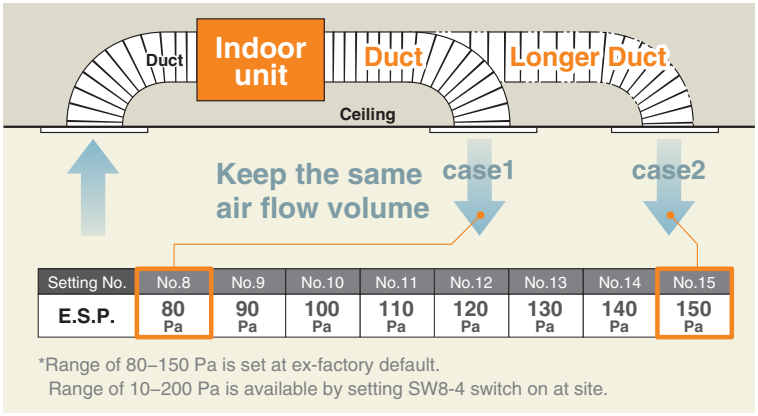

Setting No.	No.8	No.9	No.10	No.11	No.12	No.13	No.14	No.15
E.S.P.	80 Pa	90 Pa	100 Pa	110 Pa	120 Pa	130 Pa	140 Pa	150 Pa

*Range of 80–150 Pa is set at ex-factory default.
Range of 10–200 Pa is available by setting SW8-4 switch on at site.

Range of external static pressure

10–200Pa

Motion Sensor (Option)

Motion sensor is equipped in the ceiling plane or wall plane and detects the presence/absence and activity of humans in a room to improve the comfort and energy saving performance of the unit.



LB-KIT2

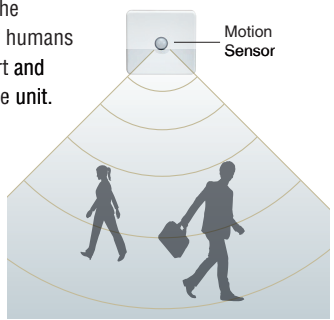

High Efficiency

Energy efficiency is improved by use of DC fan motor & high efficient heat exchanger.

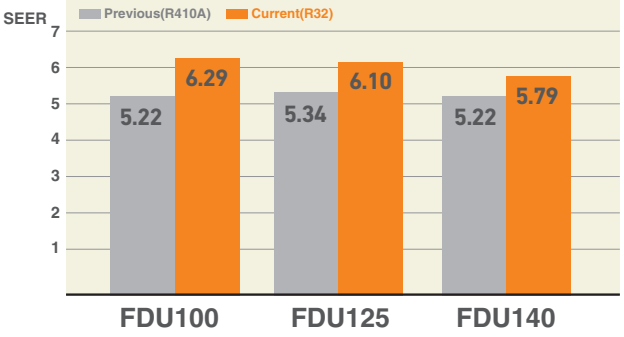

Zoning system (Max 8 zones)

Effectively control temperatures of multiple rooms with one indoor duct unit.

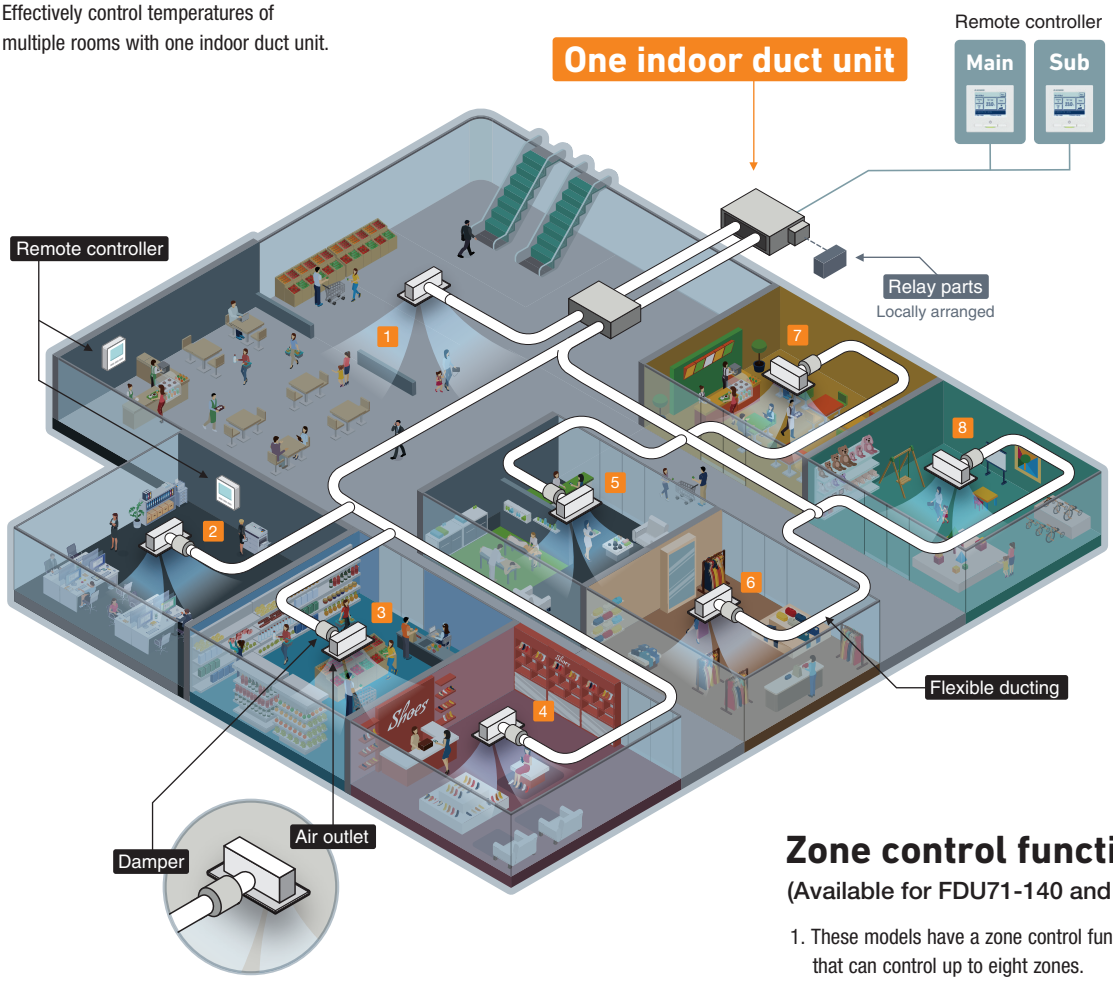

RC-EXZ3D

Top display



Zone menu



Zone control function

(Available for FDU71-140 and FDUM40-60(*3))

1. These models have a zone control function that can control up to eight zones.
2. The damper of each zone can be opened or closed with the exclusive remote control (RC-EXZ3D).
3. Timer function to open/close the damper is also available.
4. The duct system should be designed so that air flow volume of common zone(*1) or spill zone(*2) is 50% of total air flow volume.

*1: Common zone; A zone in which a damper is not installed.
*2: Spill zone; A zone in which a damper open automatically.
*3: For the FDUM series, only 4 Zone (max) are available.

Example of 6 zones

Notes : 1. Cannot control more than 8 zones.
2. Procure relevant parts such as relay parts, dampers, ducts, and wirings locally.
3. The E.S.P. to Zone 2–6 should be the same as that for Zone 1

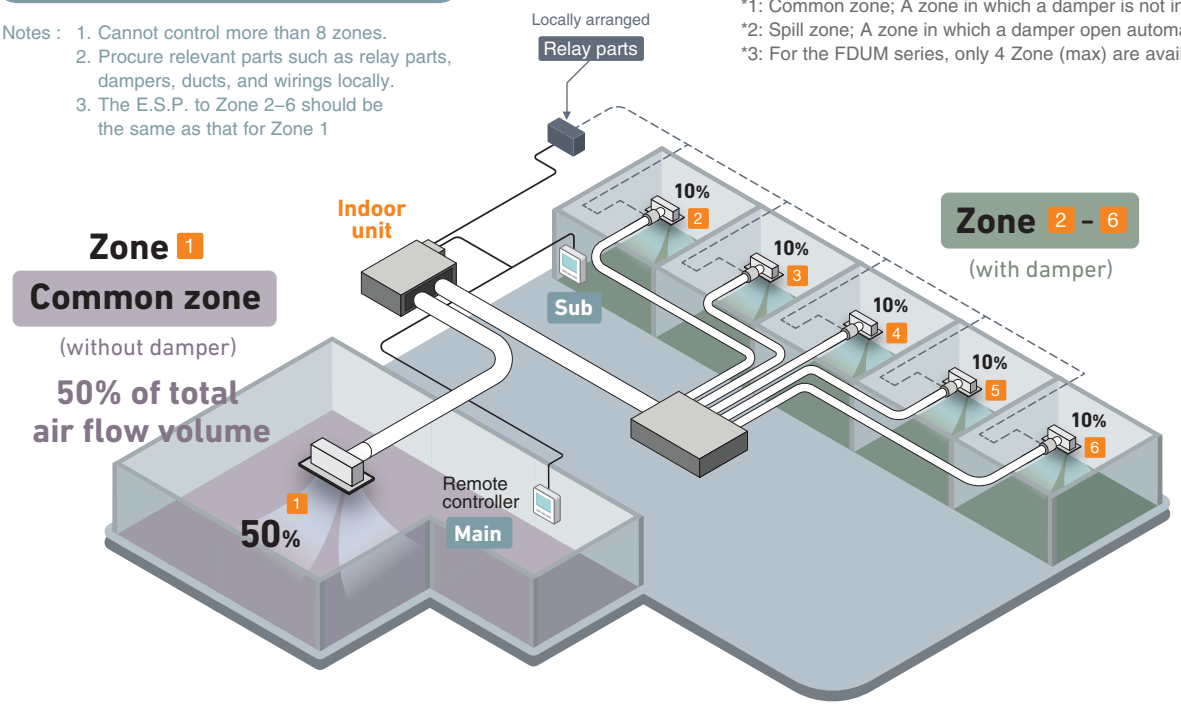

Improvement of the Serviceability

Fan unit (impeller and motor) can be pulled out from the right side of the unit.
Maintenance can be carried out from the right side or the bottom side of the unit.

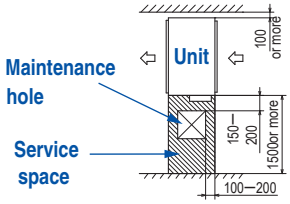

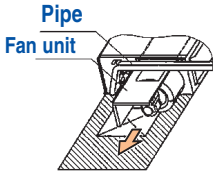

Transparent Inspection Window

Dirt condition of the bottom of a drain pan can be checked through this transparent inspection window without removing drain pan.

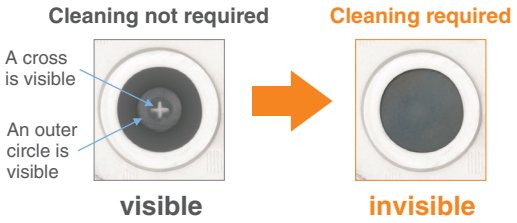

Enhanced Installation Workability

850mm Drain Pump is mounted in FDU71/100/125/140.
The indoor unit is completely hidden in the ceiling, so this is suitable for spaces with classy interior decoration.

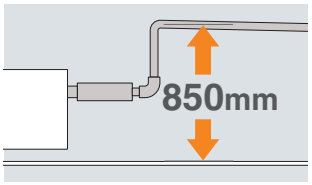

OUTDOOR UNIT

		Hyper Inverter	
FDC	R32	71VNX-W	100–140VN(S)X-W
	R410A	–	100–140VN(S)X
model			
Chargeless		30m	
Height x Width x Depth (mm)		750 x 880(+88) x 340	1300 x 970 x 370

		Micro Inverter			Standard Inverter		
FDC	R32	100–140VN(S)A-W	–	200•250•280VSA-W	71VNP-W	90•100VNP-W	125VNP-W
	R410A	100–140VN(S)A	200VSA	250VSA	–	–	–
model							
Chargeless		30m			15m		
Height x Width x Depth (mm)		845 x 970 x 370	1300 x 970 x 370	1505 x 970 x 370	640 x 800(+71) x 290	750 x 880(+88) x 340	845 x 970 x 370

Round Duct Adapter (Available for FDU71–140 and FDUM40–140)

AIRZONE Company: AIRZONE
URL:http://www.airzone.es

All-in-one solution: the whole zoning system in a plug&play device perfectly adapted to the indoor DX unit

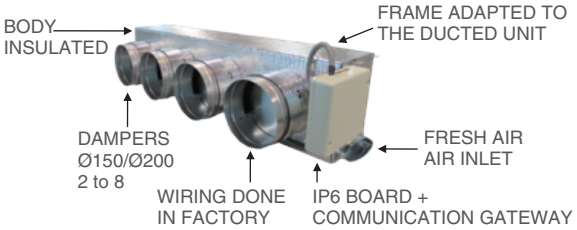

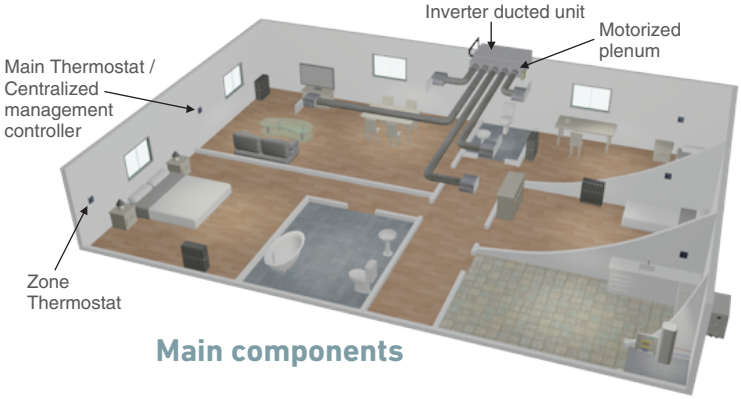

Main components

DIMENSIONS (Unit:mm) - FDU -

Model FDU71VH

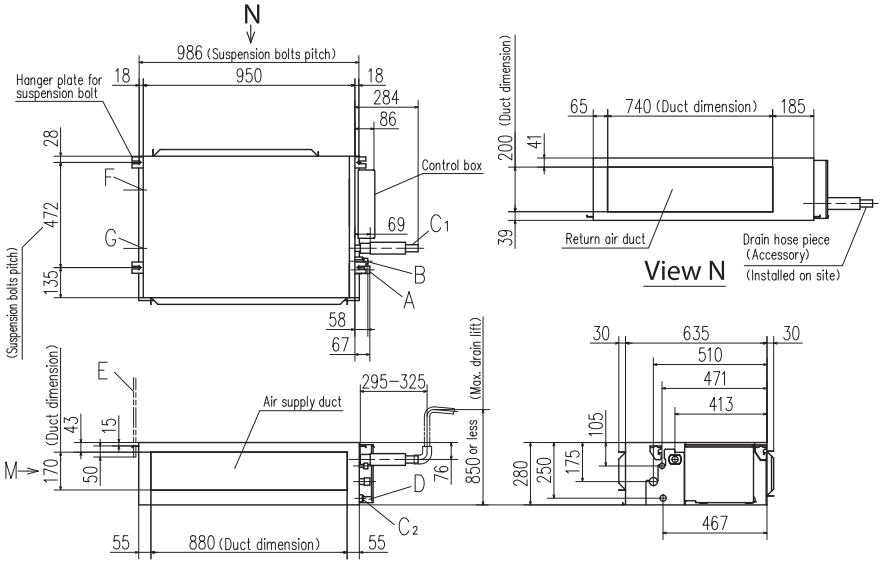

Symbol	Content	
A	Gas piping	ϕ15.88 (5/8") (Flare)
B	Liquid piping	ϕ9.52 (3/8") (Flare)
C1	Drain piping	VP25 (O.D.32)
C2	Drain piping (Gravity drainage)	VP20
D	Hole for wiring	
E	Suspension bolts	M10
F	Outside air opening for ducting	(Knock out)
G	Air outlet opening for ducting	(Knock out)
H	Inspection opening	(450X450)

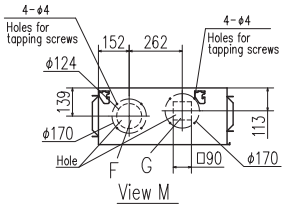

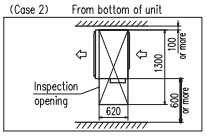

Note (1) The model name label is attached on the lid of the control box.

DIMENSIONS (Unit:mm) - FDU -

Models FDU100VH,125VH,140VH

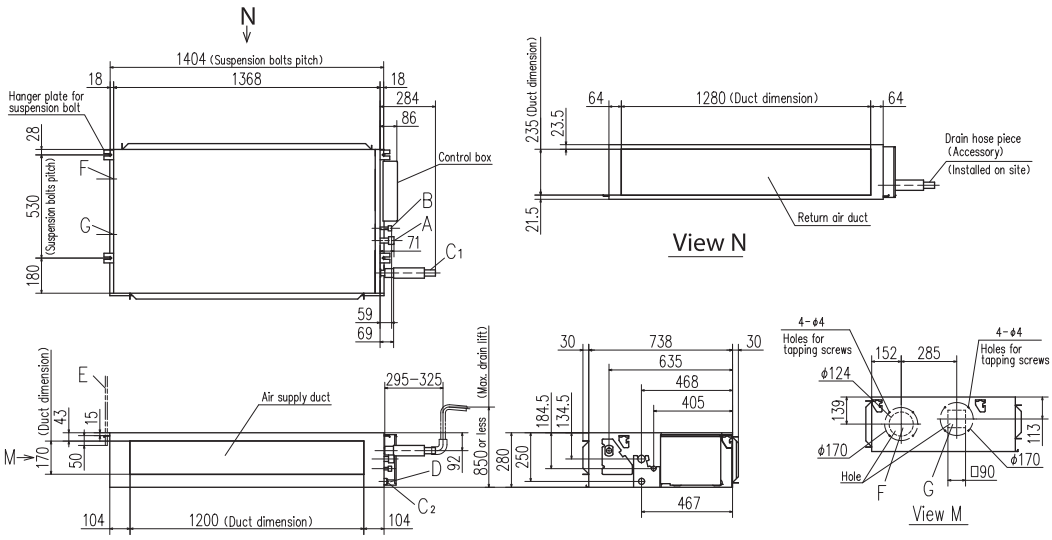

Symbol	Content	
A	Gas piping	ϕ15.88 (5/8") (Flare)
B	Liquid piping	ϕ9.52 (3/8") (Flare)
C1	Drain piping	VP25 (O.D.32)
C2	Drain piping (Gravity drainage)	VP20
D	Hole for wiring	
E	Suspension bolts	M10
F	Outside air opening for ducting	(Knock out)
G	Air outlet opening for ducting	(Knock out)
H	Inspection opening	(450X450)

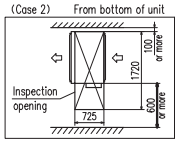

Note (1) The model name label is attached on the lid of the control box.

Models FDU200VH, 250VH, 280VH

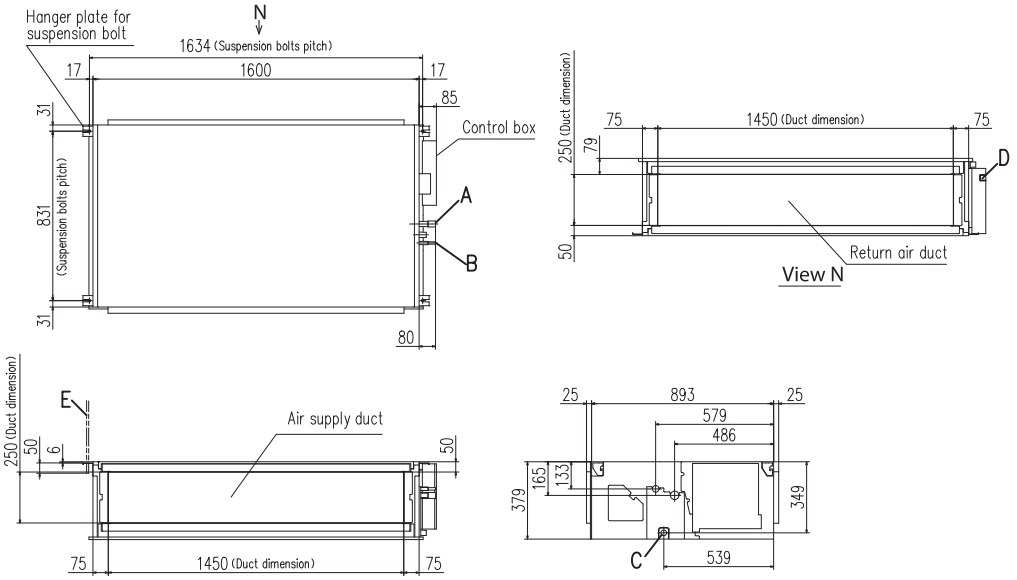

Symbol	Content		
	MODEL	200	250, 280
A	Gas piping	ϕ25.4 (1") (Brazing)	
B	Liquid piping	ϕ9.52 (3/8") (Brazing)	ϕ12.7 (1/2") (Brazing)
C	Drain piping (Gravity drainage)	VP25 (O.D.32)	
D	Hole for wiring		
E	Suspension bolts	M10	
F	Inspection hole	(450X450)	

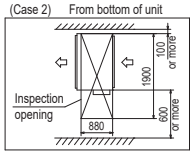

Note(1) The model name label is attached on the lid of the control box.

SPECIFICATIONS -FDU-

R32				Hyper Inverter			
Set model name				FDU71VNXWVH	FDU100VNXWVH	FDU125VNXWVH	FDU140VNXWVH
Indoor unit				FDU71VH	FDU100VH	FDU125VH	FDU140VH
Outdoor unit				FDC71VNX-W	FDC100VNX-W	FDC125VNX-W	FDC140VNX-W
Power source				1 Phase 220-240V, 50Hz / 220V, 60Hz			
Nominal cooling capacity (Min - Max)			kW	7.1 (3.2 - 8.0)	10.0 (3.5 - 11.2)	12.5 (3.5 - 14.0)	14.0 (3.5 - 16.0)
Nominal heating capacity (Min - Max)			kW	8.0 (3.6 - 9.0)	11.2 (2.7 - 12.5)	14.0 (2.7 - 17.0)	16.0 (2.7 - 18.0)
Power consumption		Cooling/Heating	kW	1.77 / 1.78	2.59 / 2.63	3.49 / 3.61	4.22 / 4.22
EER/COP		Cooling/Heating		4.01 / 4.49	3.86 / 4.26	3.58 / 3.88	3.32 / 3.79
Inrush current			A	5	5	5	5
Max. current				20	26	28	30
Sound power level*1	Indoor	Cooling/Heating	dB(A)	65 / 65	65 / 65	67 / 67	70 / 70
	Outdoor	Cooling/Heating		66 / 66	67 / 67	68 / 70	69 / 71
Sound pressure level*1	Indoor	Cooling (P-Hi/Hi/Me/Lo)		38 / 33 / 29 / 25	44 / 38 / 36 / 30	45 / 40 / 34 / 29	47 / 40 / 35 / 30
		Heating (P-Hi/Hi/Me/Lo)		38 / 33 / 29 / 25	44 / 38 / 36 / 30	45 / 40 / 34 / 29	47 / 40 / 35 / 30
	Outdoor	Cooling/Heating		51 / 51	53 / 51	53 / 54	54 / 54
Air flow	Indoor	Cooling (P-Hi/Hi/Me/Lo)	m^3/min	24 / 19 / 15 / 10	36 / 28 / 25 / 19	39 / 32 / 26 / 20	48 / 35 / 28 / 22
		Heating (P-Hi/Hi/Me/Lo)		24 / 19 / 15 / 10	36 / 28 / 25 / 19	39 / 32 / 26 / 20	48 / 35 / 28 / 22
	Outdoor	Cooling/Heating		60 / 50	100 / 100	100 / 100	100 / 100
External static pressure*2			Pa	Standard:35 Max:200	Standard:60 Max:200		
Exterior dimensions	Indoor	HeightxWidthxDepth	mm	280 x 950 x 635	280 x 1370 x 740		
	Outdoor			750 x 880(+88) x 340	1300 x 970 x 370		
Net weight	Indoor		kg	34	54		
	Outdoor			60	97		
Ref.piping size	Liquid/Gas		ømm	9.52(3/8") / 15.88(5/8")			
Refrigerant line (one way) length			m	Max.50	Max.100		
Vertical height differences		Outdoor is higher/lower	m	Max.30 / Max.15	Max.50 / Max.15		
Outdoor operating temperature range		Cooling	°CDB	-15 to 50*3			
		Heating	°CWB	-20 to 20			
Air filter				Procure locally			
Remote control (option)				Wired:RC-EX3D, RC-E5, RC-ES1 Wireless:RCN-KIT4-E2			

R32				Hyper Inverter		
Set model name				FDU100VSXWVH	FDU125VSXWVH	FDU140VSXWVH
Indoor unit				FDU100VH	FDU125VH	FDU140VH
Outdoor unit				FDC100VSX-W	FDC125VSX-W	FDC140VSX-W
Power source				3 Phase 380-415V, 50Hz / 380V, 60Hz		
Nominal cooling capacity (Min - Max)			kW	10.0 (3.5 - 11.2)	12.5 (3.5 - 14.0)	14.0 (3.5 - 16.0)
Nominal heating capacity (Min - Max)			kW	11.2 (2.7 - 16.0)	14.0 (2.7 - 18.0)	16.0 (2.7 - 20.0)
Power consumption		Cooling/Heating	kW	2.59 / 2.63	3.49 / 3.61	4.22 / 4.22
EER/COP		Cooling/Heating		3.86 / 4.26	3.58 / 3.88	3.32 / 3.79
Inrush current			A	5	5	5
Max. current				15	16	17
Sound power level*1	Indoor	Cooling/Heating	dB(A)	65 / 65	67 / 67	70 / 70
	Outdoor	Cooling/Heating		67 / 67	68 / 70	69 / 71
Sound pressure level*1	Indoor	Cooling (P-Hi/Hi/Me/Lo)		44 / 38 / 36 / 30	45 / 40 / 34 / 29	47 / 40 / 35 / 30
		Heating (P-Hi/Hi/Me/Lo)		44 / 38 / 36 / 30	45 / 40 / 34 / 29	47 / 40 / 35 / 30
	Outdoor	Cooling/Heating		53 / 51	53 / 54	54 / 54
Air flow	Indoor	Cooling (P-Hi/Hi/Me/Lo)	m^3/min	36 / 28 / 25 / 19	39 / 32 / 26 / 20	48 / 35 / 28 / 22
		Heating (P-Hi/Hi/Me/Lo)		36 / 28 / 25 / 19	39 / 32 / 26 / 20	48 / 35 / 28 / 22
	Outdoor	Cooling/Heating		100 / 100	100 / 100	100 / 100
External static pressure*2			Pa	Standard:60 Max:200		
Exterior dimensions	Indoor	HeightxWidthxDepth	mm	280 x 1370 x 740		
	Outdoor			1300 x 970 x 370		
Net weight	Indoor		kg	54		
	Outdoor			99		
Ref.piping size	Liquid/Gas		ømm	9.52(3/8") / 15.88(5/8")		
Refrigerant line (one way) length			m	Max.100		
Vertical height differences		Outdoor is higher/lower	m	Max.50 / Max.15		
Outdoor operating temperature range		Cooling	°CDB	-15 to 50,*3		
		Heating	°CWB	-20 to 20		
Air filter				Procure locally		
Remote control (option)				Wired:RC-EX3D, RC-E5, RC-ES1 Wireless:RCN-KIT4-E2		

NOTES:

The data are measured under the following conditions(R32:ISO-T1, -H1 / R410A:ISO-T1).
Cooling:Indoor temp. of 27°CDB, 19°CWB, and outdoor temp. of 35°CDB. Heating:Indoor temp. of 20°CDB, and outdoor temp. of 7°CDB, 6°CWB.
*1 : Indicates the value in an anechoic chamber. During operation these values are somewhat higher due to ambient conditions.
*2 : External static pressure is changeable to be set by the remote control. MAX external static pressure is ''High static pressure'' setting. The values of sound pressure level become 5dB(A) higher at external static pressure of 200Pa.
*3 : If a cooling operation is conducted when the outdoor air temperature is –5°C or lower, the outdoor unit should be installed at a place where it is not influenced by natural wind. If wind blows, the low pressure will drop and compressor frequency will increase, this will cause the capacity to drop and may cause the unit to break down.

R410A				Hyper Inverter		
Set model name				FDU100VNXVH	FDU125VNXVH	FDU140VNXVH
Indoor unit				FDU100VH	FDU125VH	FDU140VH
Outdoor unit				FDC100VNX	FDC125VNX	FDC140VNX
Power source				1 Phase 220-240V, 50Hz / 220V, 60Hz		
Nominal cooling capacity (Min - Max)			kW	10.0 (4.0 - 11.2)	12.5 (5.0 - 14.0)	14.0 (5.0 - 16.0)
Nominal heating capacity (Min - Max)			kW	11.2 (4.0 - 12.5)	14.0 (4.0 - 17.0)	16.0 (4.0 - 18.0)
Power consumption		Cooling/Heating	kW	2.68 / 3.02	3.49 / 3.77	4.28 / 4.42
EER/COP		Cooling/Heating		3.73 / 3.71	3.58 / 3.71	3.27 / 3.62
Inrush current			A	5	5	5
Max. current				25	29	30
Sound power level*1	Indoor	Cooling/Heating	dB(A)	65 / 65	67 / 67	70 / 70
	Outdoor	Cooling/Heating		70 / 70	70 / 70	72 / 72
Sound pressure level*1	Indoor	Cooling (P-Hi/Hi/Me/Lo)		44 / 38 / 36 / 30	45 / 40 / 34 / 29	47 / 40 / 35 / 30
		Heating (P-Hi/Hi/Me/Lo)		44 / 38 / 36 / 30	45 / 40 / 34 / 29	47 / 40 / 35 / 30
	Outdoor	Cooling/Heating		48 / 50	48 / 50	49 / 52
Air flow	Indoor	Cooling (P-Hi/Hi/Me/Lo)	m^3/min	36 / 28 / 25 / 19	39 / 32 / 26 / 20	48 / 35 / 28 / 22
		Heating (P-Hi/Hi/Me/Lo)		36 / 28 / 25 / 19	39 / 32 / 26 / 20	48 / 35 / 28 / 22
	Outdoor	Cooling/Heating		100 / 100	100 / 100	100 / 100
External static pressure*2			Pa	Standard:60 Max:200		
Exterior dimensions	Indoor	HeightxWidthxDepth	mm	280 x 1370 x 740		
	Outdoor			1300 x 970 x 370		
Net weight	Indoor		kg	54		
	Outdoor			105		
Ref.piping size	Liquid/Gas		ømm	9.52(3/8") / 15.88(5/8")		
Refrigerant line (one way) length			m	Max.100		
Vertical height differences		Outdoor is higher/lower	m	Max.30 / Max.15		
Outdoor operating temperature range		Cooling	°CDB	-15 to 43*3		
		Heating	°CWB	-20 to 20		
Air filter				Procure locally		
Remote control (option)				Wired:RC-EX3D, RC-E5, RC-ES1 Wireless:RCN-KIT4-E2		

R410A				Hyper Inverter		
Set model name				FDU100VSXVH	FDU125VSXVH	FDU140VSXVH
Indoor unit				FDU100VH	FDU125VH	FDU140VH
Outdoor unit				FDC100VSX	FDC125VSX	FDC140VSX
Power source				3 Phase 380-415V, 50Hz / 380V, 60Hz		
Nominal cooling capacity (Min - Max)			kW	10.0 (4.0 - 11.2)	12.5 (5.0 - 14.0)	14.0 (5.0 - 16.0)
Nominal heating capacity (Min - Max)			kW	11.2 (4.0 - 16.0)	14.0 (4.0 - 18.0)	16.0 (4.0 - 20.0)
Power consumption		Cooling/Heating	kW	2.68 / 3.02	3.49 / 3.77	4.28 / 4.42
EER/COP		Cooling/Heating		3.73 / 3.71	3.58 / 3.71	3.27 / 3.62
Inrush current			A	5	5	5
Max. current				16	18	19
Sound power level*1	Indoor	Cooling/Heating	dB(A)	65 / 65	67 / 67	70 / 70
	Outdoor	Cooling/Heating		70 / 70	70 / 70	72 / 72
Sound pressure level*1	Indoor	Cooling (P-Hi/Hi/Me/Lo)		44 / 38 / 36 / 30	45 / 40 / 34 / 29	47 / 40 / 35 / 30
		Heating (P-Hi/Hi/Me/Lo)		44 / 38 / 36 / 30	45 / 40 / 34 / 29	47 / 40 / 35 / 30
	Outdoor	Cooling/Heating		48 / 50	48 / 50	49 / 52
Air flow	Indoor	Cooling (P-Hi/Hi/Me/Lo)	m^3/min	36 / 28 / 25 / 19	39 / 32 / 26 / 20	48 / 35 / 28 / 22
		Heating (P-Hi/Hi/Me/Lo)		36 / 28 / 25 / 19	39 / 32 / 26 / 20	48 / 35 / 28 / 22
	Outdoor	Cooling/Heating		100 / 100	100 / 100	100 / 100
External static pressure*2			Pa	Standard:60 Max:200		
Exterior dimensions	Indoor	HeightxWidthxDepth	mm	280 x 1370 x 740		
	Outdoor			1300 x 970 x 370		
Net weight	Indoor		kg	54		
	Outdoor			105		
Ref.piping size	Liquid/Gas		ømm	9.52(3/8") / 15.88(5/8")		
Refrigerant line (one way) length			m	Max.100		
Vertical height differences		Outdoor is higher/lower	m	Max.30 / Max.15		
Outdoor operating temperature range		Cooling	°CDB	-15 to 43*3		
		Heating	°CWB	-20 to 20		
Air filter				Procure locally		
Remote control (option)				Wired:RC-EX3D, RC-E5, RC-ES1 Wireless:RCN-KIT4-E2		

SPECIFICATIONS -FDU-

R32				Micro Inverter		
Set model name				FDU100VNAWVH	FDU125VNAWVH	FDU140VNAWVH
Indoor unit				FDU100VH	FDU125VH	FDU140VH
Outdoor unit				FDC100VNA-W	FDC125VNA-W	FDC140VNA-W
Power source				1 Phase 220-240V, 50Hz / 220V, 60Hz		
Nominal cooling capacity (Min - Max)			kW	10.0 (4.0 - 11.2)	12.5 (5.0 - 14.0)	13.6 (5.0 - 14.5)
Nominal heating capacity (Min - Max)			kW	11.2 (4.0 - 12.5)	14.0 (4.0 - 16.0)	15.5 (4.0 - 16.5)
Power consumption		Cooling/Heating	kW	2.99 / 2.66	4.36 / 3.69	5.13 / 4.21
EER/COP		Cooling/Heating		3.35 / 4.21	2.87 / 3.79	2.65 / 3.68
Inrush current			A	5	5	5
Max. current				26	26	27
Sound power level*1	Indoor	Cooling/Heating	dB(A)	65 / 65	67 / 67	70 / 70
	Outdoor	Cooling/Heating		69 / 70	71 / 71	72 / 73
Sound pressure level*1	Indoor	Cooling (P-Hi/Hi/Me/Lo)		44 / 38 / 36 / 30	45 / 40 / 34 / 29	47 / 40 / 35 / 30
		Heating (P-Hi/Hi/Me/Lo)		44 / 38 / 36 / 30	45 / 40 / 34 / 29	47 / 40 / 35 / 30
	Outdoor	Cooling/Heating		54 / 55	54 / 56	56 / 58
Air flow	Indoor	Cooling (P-Hi/Hi/Me/Lo)	m^3/min	36 / 28 / 25 / 19	39 / 32 / 26 / 20	48 / 35 / 28 / 22
		Heating (P-Hi/Hi/Me/Lo)		36 / 28 / 25 / 19	39 / 32 / 26 / 20	48 / 35 / 28 / 22
	Outdoor	Cooling/Heating		75 / 73	75 / 73	75 / 73
External static pressure*2			Pa	Standard:60 Max:200		
Exterior dimensions	Indoor	HeightxWidthxDepth	mm	280 x 1370 x 740		
	Outdoor			845 x 970 x 370		
Net weight	Indoor		kg	54		
	Outdoor			77		
Ref.piping size	Liquid/Gas		ømm	9.52(3/8") / 15.88(5/8")		
Refrigerant line (one way) length			m	Max.50		
Vertical height differences		Outdoor is higher/lower	m	Max.50 / Max.15		
Outdoor operating temperature range		Cooling	°CDB	-15 to 50*3		
		Heating	°CWB	-20 to 20		
Air filter				Procure locally		
Remote control (option)				Wired:RC-EX3D, RC-E5, RC-ES1 Wireless:RCN-KIT4-E2		

R32				Micro Inverter		
Set model name				FDU100VSAWVH	FDU125VSAWVH	FDU140VSAWVH
Indoor unit				FDU100VH	FDU125VH	FDU140VH
Outdoor unit				FDC100VSA-W	FDC125VSA-W	FDC140VSA-W
Power source				3 Phase 380-415V, 50Hz / 380V, 60Hz		
Nominal cooling capacity (Min - Max)			kW	10.0 (4.0 - 11.2)	12.5 (5.0 - 14.0)	13.6 (5.0 - 14.5)
Nominal heating capacity (Min - Max)			kW	11.2 (4.0 - 12.5)	14.0 (4.0 - 16.0)	15.5 (4.0 - 16.5)
Power consumption		Cooling/Heating	kW	2.99 / 2.66	4.36 / 3.69	5.13 / 4.21
EER/COP		Cooling/Heating		3.35 / 4.21	2.87 / 3.79	2.65 / 3.68
Inrush current			A	5	5	5
Max. current				17	17	18
Sound power level*1	Indoor	Cooling/Heating	dB(A)	65 / 65	67 / 67	70 / 70
	Outdoor	Cooling/Heating		69 / 70	71 / 71	72 / 73
Sound pressure level*1	Indoor	Cooling (P-Hi/Hi/Me/Lo)		44 / 38 / 36 / 30	45 / 40 / 34 / 29	47 / 40 / 35 / 30
		Heating (P-Hi/Hi/Me/Lo)		44 / 38 / 36 / 30	45 / 40 / 34 / 29	47 / 40 / 35 / 30
	Outdoor	Cooling/Heating		54 / 55	54 / 56	56 / 58
Air flow	Indoor	Cooling (P-Hi/Hi/Me/Lo)	m^3/min	36 / 28 / 25 / 19	39 / 32 / 26 / 20	48 / 35 / 28 / 22
		Heating (P-Hi/Hi/Me/Lo)		36 / 28 / 25 / 19	39 / 32 / 26 / 20	48 / 35 / 28 / 22
	Outdoor	Cooling/Heating		75 / 73	75 / 73	75 / 73
External static pressure*2			Pa	Standard:60 Max:200		
Exterior dimensions	Indoor	HeightxWidthxDepth	mm	280 x 1370 x 740		
	Outdoor			845 x 970 x 370		
Net weight	Indoor		kg	54		
	Outdoor			78		
Ref.piping size	Liquid/Gas		ømm	9.52(3/8") / 15.88(5/8")		
Refrigerant line (one way) length			m	Max.50		
Vertical height differences		Outdoor is higher/lower	m	Max.50 / Max.15		
Outdoor operating temperature range		Cooling	°CDB	-15 to 50*3		
		Heating	°CWB	-20 to 20		
Air filter				Procure locally		
Remote control (option)				Wired:RC-EX3D, RC-E5, RC-ES1 Wireless:RCN-KIT4-E2		

NOTES:

The data are measured under the following conditions(R32 : ISO-T1, -H1 /, R410A : ISO-T1).
Cooling:Indoor temp. of 27˚CDB, 19˚CWB, and outdoor temp. of 35˚CDB. Heating:Indoor temp. of 20˚CDB, and outdoor temp. of 7˚CDB, 6˚CWB.

*1 : Indicates the value in an anechoic chamber. During operation these values are somewhat higher due to ambient conditions.

*2 : External static pressure is changeable to be set by the remote control. MAX external static pressure is ''High static pressure'' setting. The values of sound pressure level become 5dB(A) higher at external static pressure of 200Pa.

*3 : If a cooling operation is conducted when the outdoor air temperature is –5˚C or lower, the outdoor unit should be installed at a place where it is not influenced by natural wind. If wind blows, the low pressure will drop and compressor frequency will increase, this will cause the capacity to drop and may cause the unit to break down.

*4 : In case of following conditions:Max.50m(Outdoor unit is higher & Outdoor temperature ≦ 43°C), Max.30m(Outdoor unit is higher & Outdoor temperature > 43°C)

R32				Micro Inverter		
Set model name				FDU200VSAWVH	FDU250VSAWVH	FDU280VSAWVH
Indoor unit				FDU200VH	FDU250VH	FDU280VH
Outdoor unit				FDC200VSA-W	FDC250VSA-W	FDC280VSA-W
Power source				3 Phase 380-415V, 50Hz / 380V, 60Hz		
Nominal cooling capacity (Min - Max)			kW	20.0 (7.2 - 22.4)	25.0 (7.2 - 28.0)	27.0 (6.9 - 31.5)
Nominal heating capacity (Min - Max)			kW	22.4 (6.5 - 25.0)	28.0 (6.7 - 31.5)	30.0 (6.9 - 33.5)
Power consumption		Cooling/Heating	kW	6.15 / 5.67	8.25 / 7.55	9.15 / 9.12
EER/COP		Cooling/Heating		3.25 / 3.95	3.03 / 3.75	2.95 / 3.29
Inrush current			A	5	5	5
Max. current				23	25	25
Sound power level*1	Indoor	Cooling/Heating	dB(A)	78 / 78	78 / 78	78 / 78
	Outdoor	Cooling/Heating		72 / 74	73 / 75	75 / 77
Sound pressure level*1	Indoor	Cooling (P-Hi/Hi/Me/Lo)		52 / 50 / 47 / 45	52 / 50 / 47 / 45	52 / 50 / 47 / 45
		Heating (P-Hi/Hi/Me/Lo)		52 / 50 / 47 / 44	52 / 50 / 47 / 44	52 / 50 / 47 / 44
	Outdoor	Cooling/Heating		58 / 59	58 / 62	61 / 63
Air flow	Indoor	Cooling (P-Hi/Hi/Me/Lo)	m^3/min	80 / 72 / 64 / 56	80 / 72 / 64 / 56	80 / 72 / 64 / 56
		Heating (P-Hi/Hi/Me/Lo)		80 / 72 / 64 / 56	80 / 72 / 64 / 56	80 / 72 / 64 / 56
	Outdoor	Cooling/Heating		148 / 134	148 / 153	136 / 140
External static pressure*2			Pa	Standard:72 Max:200		
Exterior dimensions	Indoor	HeightxWidthxDepth	mm	379 x 1600 x 893		
	Outdoor			1505 x 970 x 370		
Net weight	Indoor		kg	88		
	Outdoor			144	145	155
Ref.piping size	Liquid/Gas		ømm	9.52(3/8") / 22.22(7/8")	12.7(1/2") / 22.22(7/8")	
Refrigerant line (one way) length			m	Max.70		Max.60
Vertical height differences		Outdoor is higher/lower	m	Max.50*4 / Max.15		
Outdoor operating temperature range		Cooling	°CDB	-15 to 50*3		
		Heating	°CWB	-20 to 20		
Air filter				Procure locally		
Remote control (option)				Wired:RC-EX3D, RC-E5, RC-ES1 Wireless:RCN-KIT4-E2		

R410A				Micro Inverter		
Set model name				FDU100VNAVH	FDU125VNAVH	FDU140VNAVH
Indoor unit				FDU100VH	FDU125VH	FDU140VH
Outdoor unit				FDC100VNA	FDC125VNA	FDC140VNA
Power source				1 Phase 220-240V, 50Hz / 220V, 60Hz		
Nominal cooling capacity (Min - Max)			kW	10.0 (4.0 - 11.2)	12.5 (5.0 - 14.0)	13.6 (5.0 - 14.5)
Nominal heating capacity (Min - Max)			kW	11.2 (4.0 - 12.5)	14.0 (4.0 - 16.0)	15.5 (4.0 - 16.5)
Power consumption		Cooling/Heating	kW	2.84 / 2.78	4.36 / 3.69	4.93 / 4.21
EER/COP		Cooling/Heating		3.52 / 4.03	2.87 / 3.79	2.76 / 3.68
Inrush current			A	5	5	5
Max. current				26	26	27
Sound power level*1	Indoor	Cooling/Heating	dB(A)	65 / 65	67 / 67	70 / 70
	Outdoor	Cooling/Heating		70 / 70	71 / 71	73 / 73
Sound pressure level*1	Indoor	Cooling (P-Hi/Hi/Me/Lo)		44 / 38 / 36 / 30	45 / 40 / 34 / 29	47 / 40 / 35 / 30
		Heating (P-Hi/Hi/Me/Lo)		44 / 38 / 36 / 30	45 / 40 / 34 / 29	47 / 40 / 35 / 30
	Outdoor	Cooling/Heating		54 / 56	55 / 57	57 / 59
Air flow	Indoor	Cooling (P-Hi/Hi/Me/Lo)	m^3/min	36 / 28 / 25 / 19	39 / 32 / 26 / 20	48 / 35 / 28 / 22
		Heating (P-Hi/Hi/Me/Lo)		36 / 28 / 25 / 19	39 / 32 / 26 / 20	48 / 35 / 28 / 22
	Outdoor	Cooling/Heating		75 / 73	75 / 73	75 / 73
External static pressure*2			Pa	Standard:60 Max:200		
Exterior dimensions	Indoor	HeightxWidthxDepth	mm	280 x 1370 x 740		
	Outdoor			845 x 970 x 370		
Net weight	Indoor		kg	54		
	Outdoor			80		
Ref.piping size	Liquid/Gas		ømm	9.52(3/8") / 15.88(5/8")		
Refrigerant line (one way) length			m	Max.50		
Vertical height differences		Outdoor is higher/lower	m	Max.50 / Max.15		
Outdoor operating temperature range		Cooling	°CDB	-15 to 50*3		
		Heating	°CWB	-20 to 20		
Air filter				Procure locally		
Remote control (option)				Wired:RC-EX3D, RC-E5, RC-ES1 Wireless:RCN-KIT4-E2		

SPECIFICATIONS -FDU-

R410A				Micro Inverter		
Set model name				FDU100VSAVH	FDU125VSAVH	FDU140VSAVH
Indoor unit				FDU100VH	FDU125VH	FDU140VH
Outdoor unit				FDC100VSA	FDC125VSA	FDC140VSA
Power source				3 Phase 380-415V, 50Hz / 380V, 60Hz		
Nominal cooling capacity (Min - Max)			kW	10.0 (4.0 - 11.2)	12.5 (5.0 - 14.0)	13.6 (5.0 - 14.5)
Nominal heating capacity (Min - Max)			kW	11.2 (4.0 - 12.5)	14.0 (4.0 - 16.0)	15.5 (4.0 - 16.5)
Power consumption		Cooling/Heating	kW	2.84 / 2.78	4.36 / 3.69	4.93 / 4.21
EER/COP		Cooling/Heating		3.52 / 4.03	2.87 / 3.79	2.76 / 3.68
Inrush current			A	5	5	5
Max. current				17	17	18
Sound power level*1	Indoor	Cooling/Heating	dB(A)	65 / 65	67 / 67	70 / 70
	Outdoor	Cooling/Heating		70 / 70	71 / 71	73 / 73
Sound pressure level*1	Indoor	Cooling (P-Hi/Hi/Me/Lo)		44 / 38 / 36 / 30	45 / 40 / 34 / 29	47 / 40 / 35 / 30
		Heating (P-Hi/Hi/Me/Lo)		44 / 38 / 36 / 30	45 / 40 / 34 / 29	47 / 40 / 35 / 30
	Outdoor	Cooling/Heating		54 / 56	55 / 57	57 / 59
Air flow	Indoor	Cooling (P-Hi/Hi/Me/Lo)	m^3/min	36 / 28 / 25 / 19	39 / 32 / 26 / 20	48 / 35 / 28 / 22
		Heating (P-Hi/Hi/Me/Lo)		36 / 28 / 25 / 19	39 / 32 / 26 / 20	48 / 35 / 28 / 22
	Outdoor	Cooling/Heating		75 / 73	75 / 73	75 / 73
External static pressure*2			Pa	Standard:60 Max:200		
Exterior dimensions	Indoor	HeightxWidthxDepth	mm	280 x 1370 x 740		
	Outdoor			845 x 970 x 370		
Net weight	Indoor		kg	54		
	Outdoor			82		
Ref.piping size	Liquid/Gas		ømm	9.52(3/8") / 15.88(5/8")		
Refrigerant line (one way) length			m	Max.50		
Vertical height differences		Outdoor is higher/lower	m	Max.50 / Max.15		
Outdoor operating temperature range		Cooling	°CDB	-15 to 50*3		
		Heating	°CWB	-20 to 20		
Air filter				Procure locally		
Remote control (option)				Wired:RC-EX3D, RC-E5, RC-ES1 Wireless:RCN-KIT4-E2		

R410A				Micro Inverter	
Set model name				FDU200VSAVH	FDU250VSAVH
Indoor unit				FDU200VH	FDU250VH
Outdoor unit				FDC200VSA	FDC250VSA
Power source				3 Phase 380-415V, 50Hz / 380V, 60Hz	
Nominal cooling capacity (Min - Max)			kW	19.0 (5.2 - 22.4)	24.0 (6.9 - 28.0)
Nominal heating capacity (Min - Max)			kW	22.4 (3.3 - 25.0)	27.0 (5.5 - 31.5)
Power consumption		Cooling/Heating	kW	6.15 / 6.03	7.98 / 7.20
EER/COP		Cooling/Heating		3.09 / 3.71	3.01 / 3.75
Inrush current			A	5	5
Max. current				25	27
Sound power level*1	Indoor	Cooling/Heating	dB(A)	78 / 78	78 / 78
	Outdoor	Cooling/Heating		72 / 74	73 / 75
Sound pressure level*1	Indoor	Cooling (P-Hi/Hi/Me/Lo)		52 / 50 / 47 / 45	52 / 50 / 47 / 45
		Heating (P-Hi/Hi/Me/Lo)		52 / 50 / 47 / 44	52 / 50 / 47 / 44
	Outdoor	Cooling/Heating		58 / 59	59 / 62
Air flow	Indoor	Cooling (P-Hi/Hi/Me/Lo)	m^3/min	80 / 72 / 64 / 56	80 / 72 / 64 / 56
		Heating (P-Hi/Hi/Me/Lo)		80 / 72 / 64 / 56	80 / 72 / 64 / 56
	Outdoor	Cooling/Heating		135 / 135	143 / 151
External static pressure*2			Pa	Standard:72 Max:200	
Exterior dimensions	Indoor	HeightxWidthxDepth	mm	379 x 1600 x 893	
	Outdoor			1300 x 970 x 370	1505 x 970 x 370
Net weight	Indoor		kg	88	
	Outdoor			115	143
Ref.piping size	Liquid/Gas		ømm	9.52(3/8") / 22.22(7/8")	12.7(1/2") / 22.22(7/8")
Refrigerant line (one way) length			m	Max.70	
Vertical height differences		Outdoor is higher/lower	m	Max.30 / Max.15	
Outdoor operating temperature range		Cooling	°CDB	-15 to 50*3	
		Heating	°CWB	-15 to 20	
Air filter				Procure locally	
Remote control (option)				Wired:RC-EX3D, RC-E5, RC-ES1 Wireless:RCN-KIT4-E2	

NOTES:

The data are measured under the following conditions(R32 : ISO-T1, -H1 /, R410A : ISO-T1).
Cooling:Indoor temp. of 27°CDB, 19°CWB, and outdoor temp. of 35°CDB. Heating:Indoor temp. of 20°CDB, and outdoor temp. of 7°CDB, 6°CWB.
*1 : Indicates the value in an anechoic chamber. During operation these values are somewhat higher due to ambient conditions.
*2 : External static pressure is changeable to be set by the remote control. MAX external static pressure is ''High static pressure'' setting. The values of sound pressure level become 5dB(A) higher at external static pressure of 200Pa.
*3 : If a cooling operation is conducted when the outdoor air temperature is –5°C or lower, the outdoor unit should be installed at a place where it is not influenced by natural wind. If wind blows, the low pressure will drop and compressor frequency will increase, this will cause the capacity to drop and may cause the unit to break down.

R32				Standard Inverter			
Set model name				FDU71VNPWVH	FDU90VNPWVH	FDU100VNPWVH	FDU125VNPWVH
Indoor unit				FDU71VH	FDU100VH	FDU100VH	FDU125VH
Outdoor unit				FDC71VNP-W	FDC90VNP-W	FDC100VNP-W	FDC125VNP-W
Power source				1 Phase 220-240V, 50Hz / 220V, 60Hz			
Nominal cooling capacity (Min - Max)			kW	7.1 (1.5 - 7.3)	9.0 (2.1 - 9.5)	10.0 (2.1 - 10.2)	12.1 (5.0 - 12.1)
Nominal heating capacity (Min - Max)			kW	7.1 (1.1 - 7.3)	9.0 (1.7 - 9.5)	10.0 (1.7 - 10.4)	12.1 (4.0 - 13.3)
Power consumption		Cooling/Heating	kW	2.60 / 1.89	2.62 / 1.98	3.08 / 2.45	3.85 / 3.28
EER/COP		Cooling/Heating		2.73. / 3.76	3.44 / 4.55	3.25 / 4.08	3.14 / 3.69
Inrush current			A	5	5	5	5
Max. current				15.8	19	19	20
Sound power level*1	Indoor	Cooling/Heating	dB(A)	65 / 65	65 / 65	65 / 65	67 / 67
	Outdoor	Cooling/Heating		67 / 67	67 / 66	68 / 67	73 / 72
Sound pressure level*1	Indoor	Cooling (P-Hi/Hi/Me/Lo)		38 / 33 / 29 / 25	44 / 38 / 36 / 30	44 / 38 / 36 / 30	45 / 40 / 34 / 29
		Heating (P-Hi/Hi/Me/Lo)		38 / 33 / 29 / 25	44 / 38 / 36 / 30	44 / 38 / 36 / 30	45 / 40 / 34 / 29
	Outdoor	Cooling/Heating		54 / 54	55 / 53	56 / 54	57 / 57
Air flow	Indoor	Cooling (P-Hi/Hi/Me/Lo)	m^3/min	24 / 19 / 15 / 10	36 / 28 / 25 / 19	36 / 28 / 25 / 19	39 / 32 / 26 / 20
		Heating (P-Hi/Hi/Me/Lo)		24 / 19 / 15 / 10	36 / 28 / 25 / 19	36 / 28 / 25 / 19	39 / 32 / 26 / 20
	Outdoor	Cooling/Heating		42 / 42	59 / 55	63 / 55	75 / 79
External static pressure*2			Pa	Standard:35 Max:200	Standard:60 Max:200		
Exterior dimensions	Indoor	HeightxWidthxDepth	mm	280 x 950 x 635	280 x 1370 x 740		
	Outdoor			640 x 800(+71) x 290	750 x 880(+88) x 340		845 x 970 x 370
Net weight	Indoor		kg	34	54		
	Outdoor			45	57		73
Ref.piping size	Liquid/Gas		ømm	6.35(1/4") / 12.7(1/2")	6.35(1/4") / 15.88(5/8")		9.52(3/8") / 15.88(5/8")
Refrigerant line (one way) length			m	Max.30	Max.30		
Vertical height differences		Outdoor is higher/lower	m	Max.20 / Max.20	Max.20 / Max.20		
Outdoor operating temperature range		Cooling	°CDB	-15 to 46*3			
		Heating	°CWB	-15 to 20			
Air filter				Procure locally			
Remote control (option)				Wired:RC-EX3D, RC-E5, RC-ES1 Wireless:RCN-KIT4-E2			

FDUM

Intdoor Unit

Duct Connected
-Low/Middle Static pressure-

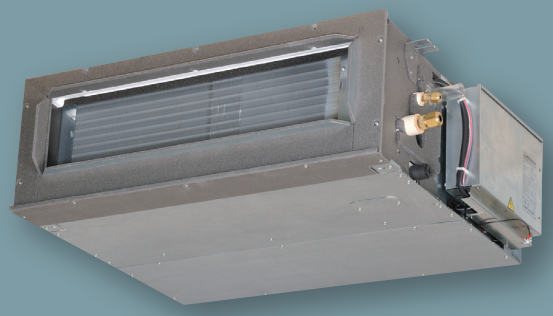

FDUM 40/50/60/71/100/125/140

Filter kit (Option)

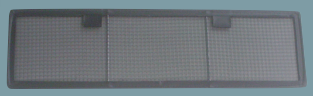

UM-FL1EF : for 40, 50
UM-FL2EF : for 60, 71
UM-FL3EF : for 100, 125, 140
external static pressure loss:5Pa



Energy Saving
Automatic Operation
Silent Operation
Hi Power
Weekly/ Sleep/ Peak-Cut Timer
Self-Diagnostics

R410A
R32
Hybrid

Remote control (Option)

Wired			Wireless	
		New! 		
RC-EX3D RC-EXZ3D	RC-E5	RC-ES1	RCN-KIT4-E2	

*Not all functions available with all remote control options.

Thin Design

The height of all FDUM models is only 280mm.

FDUM100/125/140		FDUM40/50/60/71	
70mm less		19mm less	
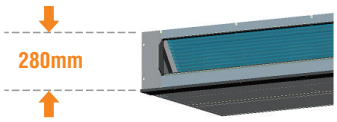		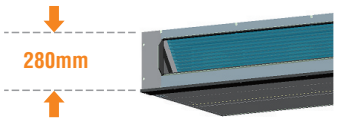	
280mm		280mm	
H 350mm	H 280mm	H 299mm	H 280mm

Motion Sensor (Option)

Motion sensor is equipped in the ceiling plane or wall plane and detects the presence/absence and activity of humans in a room to improve the comfort and energy saving performance of the unit.



LB-KIT2

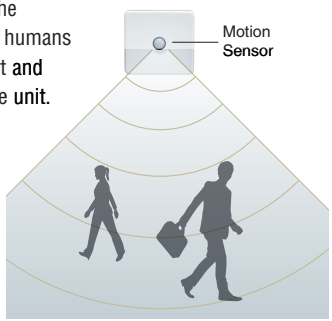

Automatic External Static Pressure (E.S.P.) Control

Duct design was simplified.
Using DC motor, the most optimum air flow volume can be achieved by this automatic control.
Indoor unit will recognize external static pressure by itself automatically and keep rated air flow volume.

RC-E5
E.S.P. button
External Static Pressure (E.S.P.) can be set by E.S.P. button.



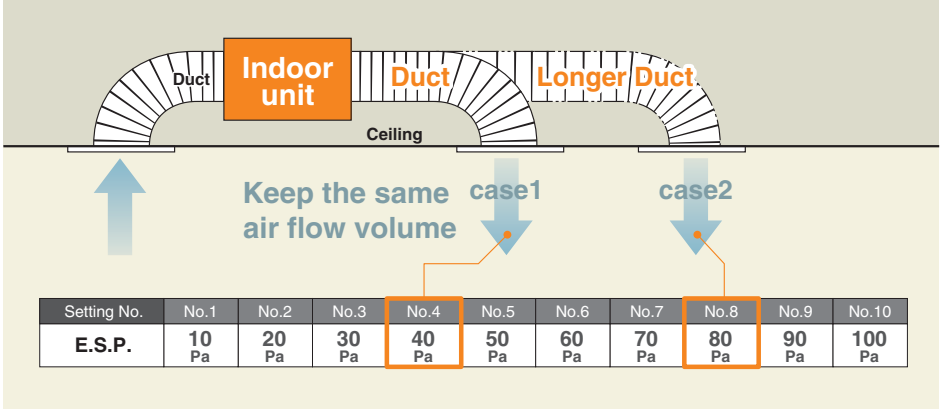

Setting No.	No.1	No.2	No.3	No.4	No.5	No.6	No.7	No.8	No.9	No.10
E.S.P.	10 Pa	20 Pa	30 Pa	40 Pa	50 Pa	60 Pa	70 Pa	80 Pa	90 Pa	100 Pa

Zoning system

Effectively control temperatures of multiple rooms with one indoor duct unit. (Please refer to P47)

Improvement of the Serviceability

Fan unit (impeller and motor) can be pulled out from the right side of the unit. Maintenance can be carried out from the right side or the bottom side of the unit.

Transparent Inspection Window

Dirt condition of the bottom of a drain pan can be checked through this transparent inspection window without removing drain pan. (Please refer to P48)

Enhanced Installation Workability

850mm Drain Pump is mounted in all models.
The indoor unit is completely hidden in the ceiling, so this is suitable for spaces with classy interior decoration.

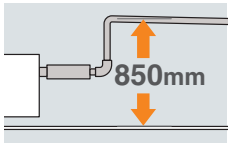

OUTDOOR UNIT

		Hyper Inverter		
SRC • FDC	R32	40ZSX-W1,50•60ZSX-W3	71VNX-W	100-140VN(S)X-W
	R410A	–	–	100-140VN(S)X
model				
Chargeless		15m	30m	
Height x Width x Depth (mm)		640 x 800(+71) x 290	750 x 880(+88) x 340	1300 x 970 x 370

		Micro Inverter			Standard Inverter		
FDC	R32	100-140VN(S)A-W	–	200•250•280VSA-W	71VNP-W	90•100VNP-W	125VNP-W
	R410A	100-140VN(S)A	200VSA	250VSA	–	–	–
model							
Chargeless		30m			15m		
Height x Width x Depth (mm)		845 x 970 x 370	1300 x 970 x 370	1505 x 970 x 370	640 x 800(+71) x 290	750 x 880(+88) x 340	845 x 970 x 370

DIMENSIONS (Unit:mm) - FDUM -

Models FDUM40VH, 50VH

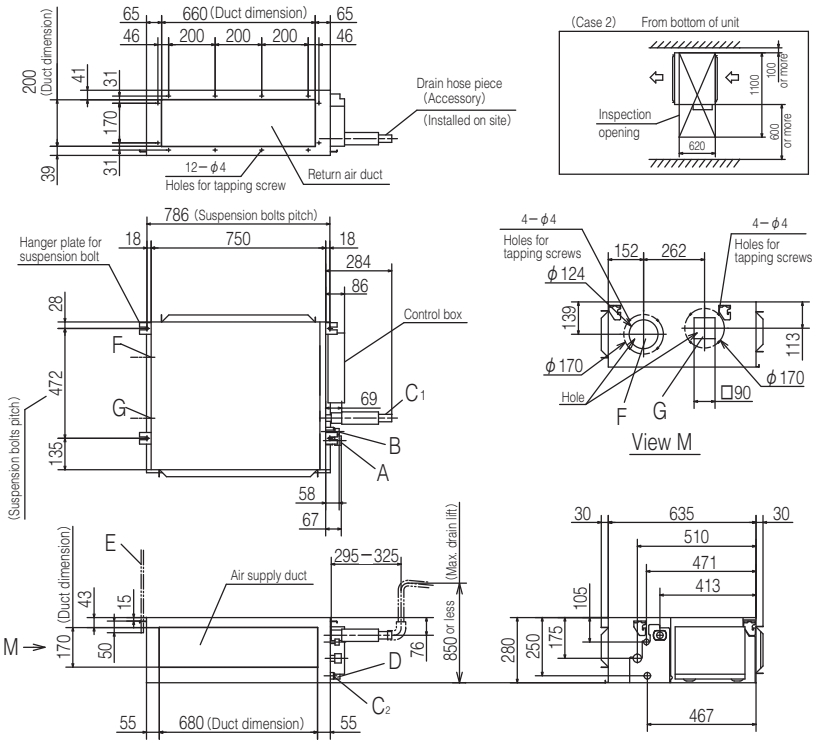

Symbol	Content	
A	Gas piping	φ12.7 (1/2") (Flare)
B	Liquid piping	φ6.35 (1/4") (Flare)
C1	Drain piping	VP25 (O.D.32)
C2	Drain piping (Gravity drainage)	VP20
D	Hole for wiring	
E	Suspension bolts	(M10)
F	Outside air opening for ducting	(φ150) (Knock out)
G	Air outlet opening for ducting	(φ125) (Knock out)
H	Inspection opening	(450×450)

Note (1) The model name label is attached on the lid of the control box.

Space for installation and service

Select either of two cases to keep space for installation and services.
(Case 1) From side of unit

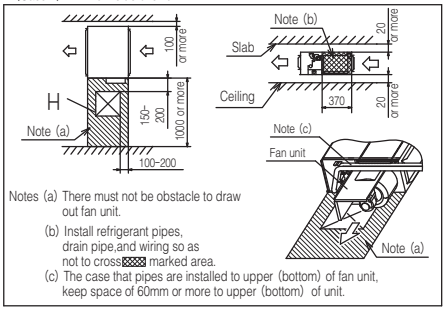

Notes (a) There must not be obstacle to draw out fan unit.
(b) Install refrigerant pipes, drain pipe,and wiring so as not to cross▨ marked area.
(c) The case that pipes are installed to upper (bottom) of fan unit, keep space of 60mm or more to upper (bottom) of unit.

DIMENSIONS (Unit:mm) - FDUM -

Models FDUM60VH,71VH

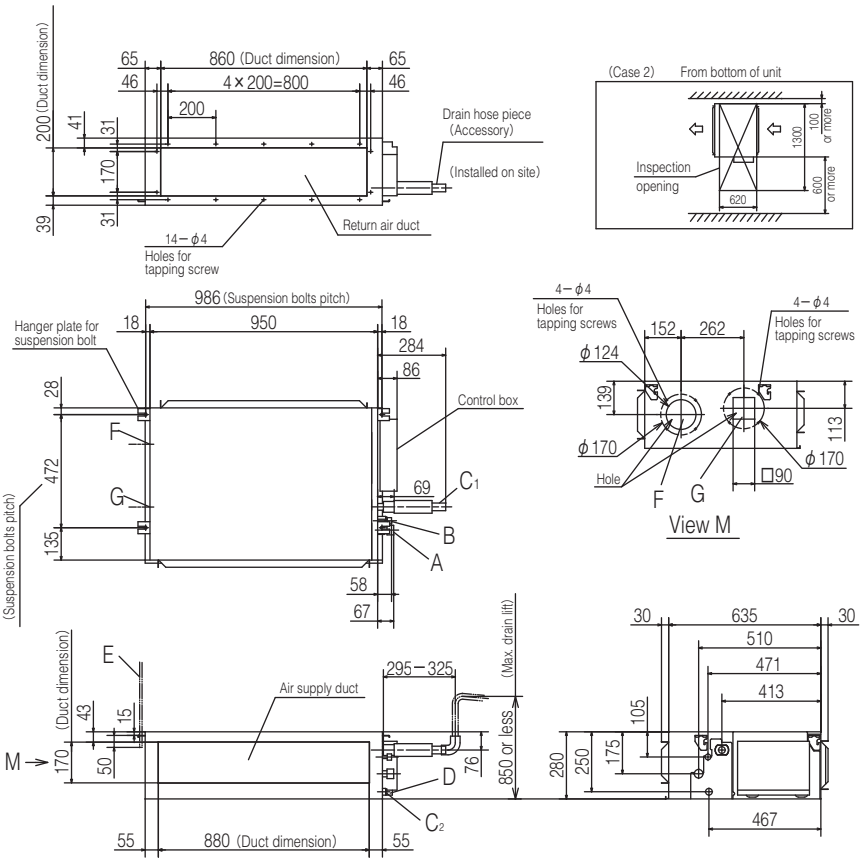

Symbol	Content		
	Model	60	71
A	Gas piping	φ12.7 (1/2") (Flare)	φ15.88 (5/8") (Flare)
B	Liquid piping	φ6.35 (1/4") (Flare)	φ9.52 (3/8") (Flare)
C1	Drain piping	VP25 (O.D.32)	
C2	Drain piping (Gravity drainage)	VP20	
D	Hole for wiring		
E	Suspension bolts	(M10)	
F	Outside air opening for ducting	(φ150) (Knock out)	
G	Air outlet opening for ducting	(φ125) (Knock out)	
H	Inspection opening	(450×450)	

Note (1) The model name label is attached on the lid of the control box.

Space for installation and service

Select either of two cases to keep space for installation and services.

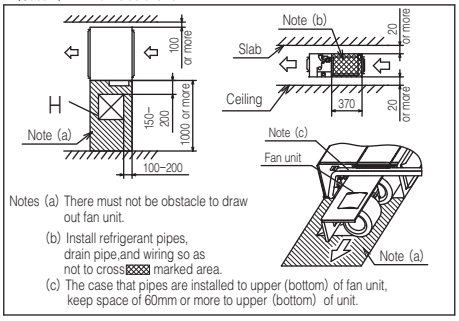

Notes (a) There must not be obstacle to draw out fan unit.

(b) Install refrigerant pipes, drain pipe,and wiring so as not to cross ▨ marked area.

(c) The case that pipes are installed to upper (bottom) of fan unit, keep space of 60mm or more to upper (bottom) of unit.

Models FDUM100VH,125VH,140VH

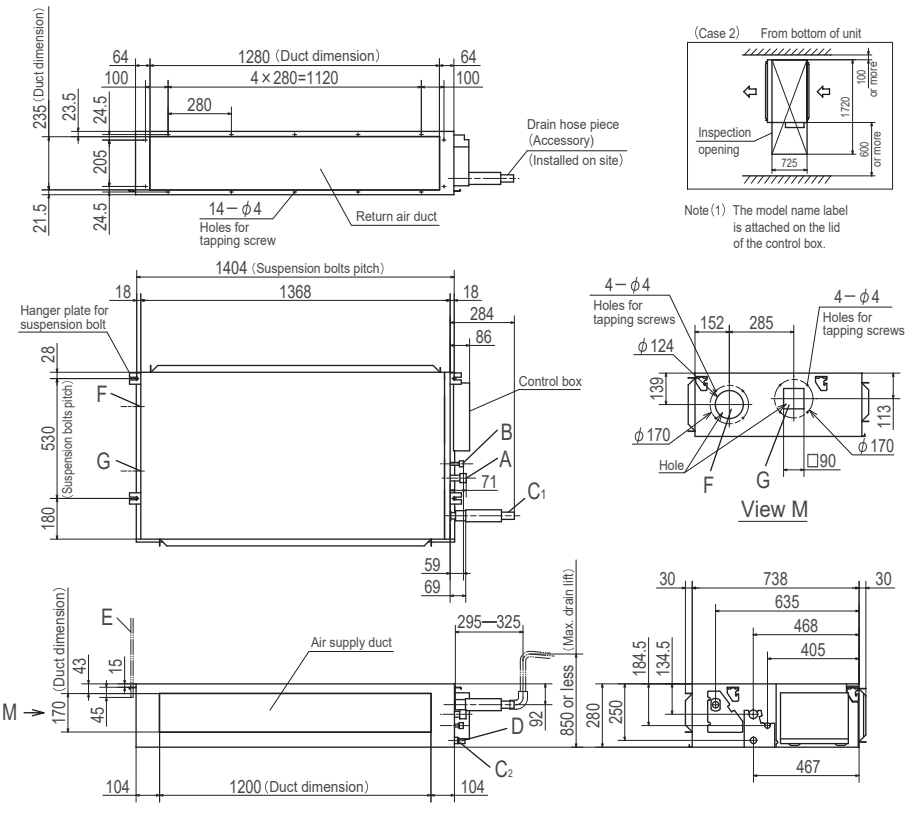

Symbol	Content	
A	Gas piping	φ15.88 (5/8") (Flare)
B	Liquid piping	φ9.52 (3/8") (Flare)
C1	Drain piping	VP25 (O.D.32)
C2	Drain piping (Gravity drainage)	VP20
D	Hole for wiring	
E	Suspension bolts	(M10)
F	Outside air opening for ducting	(φ150) (Knock out)
G	Air outlet opening for ducting	(φ125) (Knock out)
H	Inspection opening	(450×450)

Note (1) The model name label is attached on the lid of the control box.

Space for installation and service

Select either of two cases to keep space for installation and services.

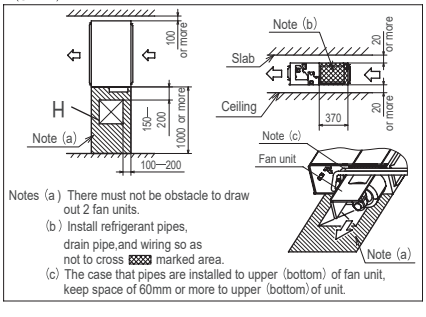

Notes (a) There must not be obstacle to draw out 2 fan units.

(b) Install refrigerant pipes, drain pipe,and wiring so as not to cross ▨ marked area.

(c) The case that pipes are installed to upper (bottom) of fan unit, keep space of 60mm or more to upper (bottom) of unit.

SPECIFICATIONS - FDUM -

R32				Hyper Inverter		
Set model name				FDUM40ZSXW1VH	FDUM50ZSXW3VH	FDUM60ZSXW3VH
Indoor unit				FDUM40VH	FDUM50VH	FDUM60VH
Outdoor unit				SRC40ZSX-W1	SRC50ZSX-W3	SRC60ZSX-W3
Power source				1 Phase 220-240V, 50Hz / 220V, 60Hz		
Nominal cooling capacity (Min - Max)			kW	4.0 (1.1 - 4.7)	5.0 (1.1 - 5.6)	5.6 (1.1 - 6.3)
Nominal heating capacity (Min - Max)			kW	4.5 (0.6 - 5.4)	5.4 (0.6 - 6.3)	6.7 (0.6 - 7.1)
Power consumption		Cooling/Heating	kW	1.10 / 1.10	1.51 / 1.59	1.54 / 1.75
EER/COP		Cooling/Heating		3.62 / 4.09	3.31 / 3.39	3.64 / 3.83
Inrush current			A	5	5	5
Max. current				15	15	15
Sound power level*1	Indoor	Cooling/Heating	dB(A)	60 / 60	60 / 60	60 / 60
	Outdoor	Cooling/Heating		63 / 62	63 / 62	65 / 65
Sound pressure level*1	Indoor	Cooling (P-Hi/Hi/Me/Lo)		37 / 32 / 29 / 26	37 / 32 / 29 / 26	36 / 31 / 28 / 25
		Heating (P-Hi/Hi/Me/Lo)		37 / 32 / 29 / 26	37 / 32 / 29 / 26	36 / 31 / 28 / 25
	Outdoor	Cooling/Heating		52 / 50	52 / 50	53 / 54
Air flow	Indoor	Cooling (P-Hi/Hi/Me/Lo)	m^3/min	13 / 10 / 9 / 8	13 / 10 / 9 / 8	20 / 15 / 13 / 10
		Heating (P-Hi/Hi/Me/Lo)		13 / 10 / 9 / 8	13 / 10 / 9 / 8	20 / 15 / 13 / 10
	Outdoor	Cooling/Heating		33 / 33	39 / 33	41.5 / 39
External static pressure*2			Pa	Standard:35 Max:100		
Exterior dimensions	Indoor	HeightxWidthxDepth	mm	280 x 750 x 635		280 x 950 x 635
	Outdoor			640 x 800(+71) x 290		
Net weight	Indoor		kg	29		34
	Outdoor			45		
Ref.piping size	Liquid/Gas		ømm	6.35(1/4") / 12.7(1/2")		
Refrigerant line (one way) length			m	Max.30		
Vertical height differences		Outdoor is higher/lower	m	Max.20 / Max.20		
Outdoor operating temperature range		Cooling	°CDB	-15 to 46*3		
		Heating	°CWB	-20 to 20		
Air filter (option)				Filter kit : UM-FL1EF		Filter kit : UM-FL2EF
Remote control (option)				Wired:RC-EX3D, RC-E5, RC-ES1 Wireless:RCN-KIT4-E2		

R32				Hyper Inverter			
Set model name				FDUM71VNXWVH	FDUM100VNXWVH	FDUM125VNXWVH	FDUM140VNXWVH
Indoor unit				FDUM71VH	FDUM100VH	FDUM125VH	FDUM140VH
Outdoor unit				FDC71VNX-W	FDC100VNX-W	FDC125VNX-W	FDC140VNX-W
Power source				1 Phase 220-240V, 50Hz / 220V, 60Hz			
Nominal cooling capacity (Min - Max)			kW	7.1 (3.2 - 8.0)	10.0 (3.5 - 11.2)	12.5 (3.5 - 14.0)	14.0 (3.5 - 16.0)
Nominal heating capacity (Min - Max)			kW	8.0 (3.6 - 9.0)	11.2 (2.7 - 12.5)	14.0 (2.7 - 17.0)	16.0 (2.7 - 18.0)
Power consumption		Cooling/Heating	kW	1.77 / 1.78	2.59 / 2.63	3.49 / 3.61	4.22 / 4.22
EER/COP		Cooling/Heating		4.01 / 4.49	3.86 / 4.26	3.58 / 3.88	3.32 / 3.79
Inrush current			A	5	5	5	5
Max. current				20	26	28	30
Sound power level*1	Indoor	Cooling/Heating	dB(A)	65 / 65	65 / 65	67 / 67	70 / 70
	Outdoor	Cooling/Heating		66 / 66	67 / 67	68 / 70	69 / 71
Sound pressure level*1	Indoor	Cooling (P-Hi/Hi/Me/Lo)		38 / 33 / 29 / 25	44 / 38 / 36 / 30	45 / 40 / 34 / 29	47 / 40 / 35 / 30
		Heating (P-Hi/Hi/Me/Lo)		38 / 33 / 29 / 25	44 / 38 / 36 / 30	45 / 40 / 34 / 29	47 / 40 / 35 / 30
	Outdoor	Cooling/Heating		51 / 51	53 / 51	53 / 54	54 / 54
Air flow	Indoor	Cooling (P-Hi/Hi/Me/Lo)	m^3/min	24 / 19 / 15 / 10	36 / 28 / 25 / 19	39 / 32 / 26 / 20	48 / 35 / 28 / 22
		Heating (P-Hi/Hi/Me/Lo)		24 / 19 / 15 / 10	36 / 28 / 25 / 19	39 / 32 / 26 / 20	48 / 35 / 28 / 22
	Outdoor	Cooling/Heating		60 / 50	100 / 100	100 / 100	100 / 100
External static pressure*2			Pa	Standard:35 Max:100	Standard:60 Max:100		
Exterior dimensions	Indoor	HeightxWidthxDepth	mm	280 x 950 x 635	280 x 1,370 x 740		
	Outdoor			750 x 880(+88) x 340	1300 x 970 x 370		
Net weight	Indoor		kg	34	54		
	Outdoor			60	97		
Ref.piping size	Liquid/Gas		ømm	9.52(3/8") / 15.88(5/8")			
Refrigerant line (one way) length			m	Max.50	Max.100		
Vertical height differences		Outdoor is higher/lower	m	Max.30 / Max.15	Max.50 / Max.15		
Outdoor operating temperature range		Cooling	°CDB	-15 to 50*3			
		Heating	°CWB	-20 to 20			
Air filter (option)				Filter kit : UM-FL2EF	Filter kit : UM-FL3EF		
Remote control (option)				Wired:RC-EX3D, RC-E5, RC-ES1 Wireless:RCN-KIT4-E2			

NOTES:

The data are measured under the following conditions(ISO-T1, -H1).
Cooling:Indoor temp. of 27˚CDB, 19˚CWB, and outdoor temp. of 35˚CDB. Heating:Indoor temp. of 20˚CDB, and outdoor temp. of 7˚CDB, 6˚CWB.
*1 : Indicates the value in an anechoic chamber. During operation these values are somewhat higher due to ambient conditions.
*2 : External static pressure is changeable to be set by the remote control. MAX external static pressure is "High static pressure" setting. The values of sound pressure level become 5dB(A) higher at external static pressure of 100Pa.
*3 : If a cooling operation is conducted when the outdoor air temperature is –5˚C or lower, the outdoor unit should be installed at a place where it is not influenced by natural wind. If wind blows, the low pressure will drop and compressor frequency will increase, this will cause the capacity to drop and may cause the unit to break down.

SPECIFICATIONS - FDUM -

R32				Hyper Inverter		
Set model name				FDUM100VSXWVH	FDUM125VSXWVH	FDUM140VSXWVH
Indoor unit				FDUM100VH	FDUM125VH	FDUM140VH
Outdoor unit				FDC100VSX-W	FDC125VSX-W	FDC140VSX-W
Power source				3 Phase 380-415V, 50Hz / 380V, 60Hz		
Nominal cooling capacity (Min - Max)			kW	10.0 (3.5 - 11.2)	12.5 (3.5 - 14.0)	14.0 (3.5 - 16.0)
Nominal heating capacity (Min - Max)			kW	11.2 (2.7 - 16.0)	14.0 (2.7 - 18.0)	16.0 (2.7 - 20.0)
Power consumption		Cooling/Heating	kW	2.59 / 2.63	3.49 / 3.61	4.22 / 4.22
EER/COP		Cooling/Heating		3.86 / 4.26	3.58 / 3.88	3.32 / 3.79
Inrush current			A	5	5	5
Max. current				15	16	17
Sound power level*1	Indoor	Cooling/Heating	dB(A)	65 / 65	67 / 67	70 / 70
	Outdoor	Cooling/Heating		67 / 67	68 / 70	69 / 71
Sound pressure level*1	Indoor	Cooling (P-Hi/Hi/Me/Lo)		44 / 38 / 36 / 30	45 / 40 / 34 / 29	47 / 40 / 35 / 30
		Heating (P-Hi/Hi/Me/Lo)		44 / 38 / 36 / 30	45 / 40 / 34 / 29	47 / 40 / 35 / 30
	Outdoor	Cooling/Heating		53 / 51	53 / 54	54 / 54
Air flow	Indoor	Cooling (P-Hi/Hi/Me/Lo)	m^3/min	36 / 28 / 25 / 19	39 / 32 / 26 / 20	48 / 35 / 28 / 22
		Heating (P-Hi/Hi/Me/Lo)		36 / 28 / 25 / 19	39 / 32 / 26 / 20	48 / 35 / 28 / 22
	Outdoor	Cooling/Heating		100 / 100	100 / 100	100 / 100
External static pressure*2			Pa	Standard:60 Max:100		
Exterior dimensions	Indoor	HeightxWidthxDepth	mm	280 x 1370 x 740		
	Outdoor			1300 x 970 x 370		
Net weight	Indoor		kg	54		
	Outdoor			99		
Ref.piping size	Liquid/Gas		ømm	9.52(3/8") / 15.88(5/8")		
Refrigerant line (one way) length			m	Max.100		
Vertical height differences		Outdoor is higher/lower	m	Max.50 / Max.15		
Outdoor operating temperature range		Cooling	°CDB	-15 to 50*3		
		Heating	°CWB	-20 to 20		
Air filter (option)				Filter kit : UM-FL3EF		
Remote control (option)				Wired:RC-EX3D, RC-E5, RC-ES1 Wireless:RCN-KIT4-E2		

The values are for simultaneous Multi operation.

R32				Hyper Inverter				
Set model name				FDUM71VNXWPVH	FDUM100VNXWPVH	FDUM125VNXWPVH	FDUM140VNXWPVH	FDUM140VNXWTVH
				Twin				Triple
Indoor unit				FDUM40VH x 2	FDUM50VH x 2	FDUM60VH x 2	FDUM71VH x 2	FDUM50VH x 3
Outdoor unit				FDC71VNX-W	FDC100VNX-W	FDC125VNX-W	FDC140VNX-W	FDC140VNX-W
Power source				1 Phase 220-240V, 50Hz / 220V, 60Hz				
Nominal cooling capacity (Min - Max)			kW	7.1 (3.2 - 8.0)	10.0 (3.5 - 11.2)	12.5 (3.5 - 14.0)	14.0 (3.5 - 16.0)	14.0 (3.5 - 16.0)
Nominal heating capacity (Min - Max)			kW	8.0 (3.6 - 9.0)	11.2 (2.7 - 12.5)	14.0 (2.7 - 17.0)	16.0 (2.7 - 18.0)	16.0 (2.7 - 18.0)
Power consumption		Cooling/Heating	kW	1.76 / 1.80	2.66 / 2.96	3.26 / 3.26	3.97 / 3.91	4.03 / 4.04
EER/COP		Cooling/Heating		4.03 / 4.44	3.76 / 3.79	3.83 / 4.30	3.53 / 4.10	3.48 / 3.96
Inrush current			A	5	5	5	5	5
Max. current				20	26	28	30	30
Sound power level*1	Indoor*4	Cooling/Heating	dB(A)	60 / 60	60 / 60	60 / 60	65 / 65	60 / 60
	Outdoor	Cooling/Heating		66 / 66	67 / 67	68 / 70	69 / 71	69 / 71
Sound pressure level*1	Indoor*4	Cooling (P-Hi/Hi/Me/Lo)		37 / 32 / 29 / 26	37 / 32 / 29 / 26	36 / 31 / 28 / 25	38 / 33 / 29 / 25	37 / 32 / 29 / 26
		Heating (P-Hi/Hi/Me/Lo)		37 / 32 / 29 / 26	37 / 32 / 29 / 26	36 / 31 / 28 / 25	38 / 33 / 29 / 25	37 / 32 / 29 / 26
	Outdoor	Cooling/Heating		51 / 51	53 / 51	53 / 54	54 / 54	54 / 54
Air flow	Indoor*4	Cooling (P-Hi/Hi/Me/Lo)	m^3/min	13 / 10 / 9 / 8	13 / 10 / 9 / 8	20 / 15 / 13 / 10	24 / 19 / 15 / 10	13 / 10 / 9 / 8
		Heating (P-Hi/Hi/Me/Lo)		13 / 10 / 9 / 8	13 / 10 / 9 / 8	20 / 15 / 13 / 10	24 / 19 / 15 / 10	13 / 10 / 9 / 8
	Outdoor	Cooling/Heating		60 / 50	100 / 100	100 / 100	100 / 100	100 / 100
External static pressure*2			Pa	Standard:35 Max:100				
Exterior dimensions	Indoor	HeightxWidthxDepth	mm	280 x 750 x 635		280 x 950 x 635		280 x 750 x 635
	Outdoor			750 x 880(+88) x 340	1300 x 970 x 370			
Net weight	Indoor		kg	29		34		29
	Outdoor			60	97			
Ref.piping size	Liquid/Gas		ømm	9.52(3/8") / 15.88(5/8")				
Refrigerant line (one way) length			m	Max.50	Max.100			
Vertical height differences		Outdoor is higher/lower	m	Max.30 / Max.15	Max.50 / Max.15			
Outdoor operating temperature range		Cooling	°CDB	-15 to 50*3				
		Heating	°CWB	-20 to 20				
Air filter (option)				Filter kit : UM-FL1EF		Filter kit : UM-FL2EF		Filter kit : UM-FL1EF
Remote control (option)				Wired:RC-EX3D, RC-E5, RC-ES1 Wireless:RCN-KIT4-E2				

NOTES:

The data are measured under the following conditions(ISO-T1, -H1).
Cooling:Indoor temp. of 27˚CDB, 19˚CWB, and outdoor temp. of 35˚CDB. Heating:Indoor temp. of 20˚CDB, and outdoor temp. of 7˚CDB, 6˚CWB.
*1 : Indicates the value in an anechoic chamber. During operation these values are somewhat higher due to ambient conditions.
*2 : External static pressure is changeable to be set by the remote control. MAX external static pressure is "High static pressure" setting. The values of sound pressure level become 5dB(A) higher at external static pressure of 100Pa.
*3 : If a cooling operation is conducted when the outdoor air temperature is –5˚C or lower, the outdoor unit should be installed at a place where it is not influenced by natural wind. If wind blows, the low pressure will drop and compressor frequency will increase, this will cause the capacity to drop and may cause the unit to break down.
*4 : The values are for one indoor unit operation. (Multi system only)

The values are for simultaneous Multi operation.

R32				Hyper Inverter			
Set model name				FDUM100VSXWPVH	FDUM125VSXWPVH	FDUM140VSXWPVH	FDUM140VSXWTVH
				Twin			Triple
Indoor unit				FDUM50VH x 2	FDUM60VH x 2	FDUM71VH x 2	FDUM50VH x 3
Outdoor unit				FDC100VSX-W	FDC125VSX-W	FDC140VSX-W	FDC140VSX-W
Power source				3 Phase 380-415V, 50Hz / 380V, 60Hz			
Nominal cooling capacity (Min - Max)			kW	10.0 (3.5 - 11.2)	12.5 (3.5 - 14.0)	14.0 (3.5 - 16.0)	14.0 (3.5 - 16.0)
Nominal heating capacity (Min - Max)			kW	11.2 (2.7 - 16.0)	14.0 (2.7 - 18.0)	16.0 (2.7 - 20.0)	16.0 (2.7 - 20.0)
Power consumption		Cooling/Heating	kW	2.66 / 2.96	3.26 / 3.26	3.97 / 3.91	4.03 / 4.04
EER/COP		Cooling/Heating		3.76 / 3.79	3.83 / 4.30	3.53 / 4,10	3.48 / 3.96
Inrush current			A	5	5	5	5
Max. current				15	16	17	17
Sound power level*1	Indoor*4	Cooling/Heating	dB(A)	60 / 60	60 / 60	65 / 65	60 / 60
	Outdoor	Cooling/Heating		67 / 67	68 / 70	69 / 71	69 / 71
Sound pressure level*1	Indoor*4	Cooling (P-Hi/Hi/Me/Lo)		37 / 32 / 29 / 26	36 / 31 / 28 / 25	38 / 33 / 29 / 25	37 / 32 / 29 / 26
		Heating (P-Hi/Hi/Me/Lo)		37 / 32 / 29 / 26	36 / 31 / 28 / 25	38 / 33 / 29 / 25	37 / 32 / 29 / 26
	Outdoor	Cooling/Heating		53 / 51	53 / 54	54 / 54	54 / 54
Air flow	Indoor*4	Cooling (P-Hi/Hi/Me/Lo)	m^3/min	13 / 10 / 9 / 8	20 / 15 / 13 / 10	24 / 19 / 15 / 10	13 / 10 / 9 / 8
		Heating (P-Hi/Hi/Me/Lo)		13 / 10 / 9 / 8	20 / 15 / 13 / 10	24 / 19 / 15 / 10	13 / 10 / 9 / 8
	Outdoor	Cooling/Heating		100 / 100	100 / 100	100 / 100	100 / 100
External static pressure*2			Pa	Standard:35 Max:100			
Exterior dimensions	Indoor	HeightxWidthxDepth	mm	280 x 750 x 635	280 x 950 x 635		280 x 750 x 635
	Outdoor			1300 x 970 x 370			
Net weight	Indoor		kg	29	34		29
	Outdoor			99			
Ref.piping size	Liquid/Gas		ømm	9.52(3/8") / 15.88(5/8")			
Refrigerant line (one way) length			m	Max.100			
Vertical height differences		Outdoor is higher/lower	m	Max.50 / Max.15			
Outdoor operating temperature range		Cooling	°CDB	-15 to 50*3			
		Heating	°CWB	-20 to 20			
Air filter (option)				Filter kit : UM-FL1EF	Filter kit : UM-FL2EF		Filter kit : UM-FL1EF
Remote control (option)				Wired:RC-EX3D, RC-E5, RC-ES1 Wireless:RCN-KIT4-E2			

SPECIFICATIONS - FDUM -

R410A				Hyper Inverter		
Set model name				FDUM100VNXVH	FDUM125VNXVH	FDUM140VNXVH
Indoor unit				FDUM100VH	FDUM125VH	FDUM140VH
Outdoor unit				FDC100VNX	FDC125VNX	FDC140VNX
Power source				1 Phase 220-240V, 50Hz / 220V, 60Hz		
Nominal cooling capacity (Min - Max)			kW	10.0 (4.0 - 11.2)	12.5 (5.0 - 14.0)	14.0 (5.0 - 16.0)
Nominal heating capacity (Min - Max)			kW	11.2 (4.0 - 12.5)	14.0 (4.0 - 17.0)	16.0 (4.0 - 18.0)
Power consumption		Cooling/Heating	kW	2.68 / 3.02	3.49 / 3.77	4.28 / 4.42
EER/COP		Cooling/Heating		3.73 / 3.71	3.58 / 3.71	3.27 / 3.62
Inrush current			A	5	5	5
Max. current				24	26	26
Sound power level*1	Indoor	Cooling/Heating	dB(A)	65 / 65	67 / 67	70 / 70
	Outdoor	Cooling/Heating		70 / 70	70 / 70	72 / 72
Sound pressure level*1	Indoor	Cooling (P-Hi/Hi/Me/Lo)		44 / 38 / 36 / 30	45 / 40 / 34 / 29	47 / 40 / 35 / 30
		Heating (P-Hi/Hi/Me/Lo)		44 / 38 / 36 / 30	45 / 40 / 34 / 29	47 / 40 / 35 / 30
	Outdoor	Cooling/Heating		48 / 50	48 / 50	49 / 52
Air flow	Indoor	Cooling (P-Hi/Hi/Me/Lo)	m^3/min	36 / 28 / 25 / 19	39 / 32 / 26 / 20	48 / 35 / 28 / 22
		Heating (P-Hi/Hi/Me/Lo)		36 / 28 / 25 / 19	39 / 32 / 26 / 20	48 / 35 / 28 / 22
	Outdoor	Cooling/Heating		100 / 100	100 / 100	100 / 100
External static pressure*2			Pa	Standard:60 Max:100		
Exterior dimensions	Indoor	HeightxWidthxDepth	mm	280 x 1370 x 740		
	Outdoor			1300 x 970 x 370		
Net weight	Indoor		kg	54		
	Outdoor			105		
Ref.piping size	Liquid/Gas		ømm	9.52(3/8") / 15.88(5/8")		
Refrigerant line (one way) length			m	Max.100		
Vertical height differences		Outdoor is higher/lower	m	Max.30 / Max.15		
Outdoor operating temperature range		Cooling	°CDB	-15 to 43*3		
		Heating	°CWB	-20 to 20		
Air filter (option)				Filter kit : UM-FL3EF		
Remote control (option)				Wired:RC-EX3D, RC-E5, RC-ES1 Wireless:RCN-KIT4-E2		

R410A				Hyper Inverter		
Set model name				FDUM100VSXVH	FDUM125VSXVH	FDUM140VSXVH
Indoor unit				FDUM100VH	FDUM125VH	FDUM140VH
Outdoor unit				FDC100VSX	FDC125VSX	FDC140VSX
Power source				3 Phase 380-415V, 50Hz / 380V, 60Hz		
Nominal cooling capacity (Min - Max)			kW	10.0 (4.0 - 11.2)	12.5 (5.0 - 14.0)	14.0 (5.0 - 16.0)
Nominal heating capacity (Min - Max)			kW	11.2 (4.0 - 16.0)	14.0 (4.0 - 18.0)	16.0 (4.0 - 20.0)
Power consumption		Cooling/Heating	kW	2.68 / 3.02	3.49 / 3.77	4.28 / 4.42
EER/COP		Cooling/Heating		3.73 / 3.71	3.58 / 3.71	3.27 / 3.62
Inrush current			A	5	5	5
Max. current				15	15	15
Sound power level*1	Indoor	Cooling/Heating	dB(A)	65 / 65	67 / 67	70 / 70
	Outdoor	Cooling/Heating		70 / 70	70 / 70	72 / 72
Sound pressure level*1	Indoor	Cooling (P-Hi/Hi/Me/Lo)		44 / 38 / 36 / 30	45 / 40 / 34 / 29	47 / 40 / 35 / 30
		Heating (P-Hi/Hi/Me/Lo)		44 / 38 / 36 / 30	45 / 40 / 34 / 29	47 / 40 / 35 / 30
	Outdoor	Cooling/Heating		48 / 50	48 / 50	49 / 52
Air flow	Indoor	Cooling (P-Hi/Hi/Me/Lo)	m^3/min	36 / 28 / 25 / 19	39 / 32 / 26 / 20	48 / 35 / 28 / 22
		Heating (P-Hi/Hi/Me/Lo)		36 / 28 / 25 / 19	39 / 32 / 26 / 20	48 / 35 / 28 / 22
	Outdoor	Cooling/Heating		100 / 100	100 / 100	100 / 100
External static pressure*2			Pa	Standard:60 Max:100		
Exterior dimensions	Indoor	HeightxWidthxDepth	mm	280 x 1370 x 740		
	Outdoor			1300 x 970 x 370		
Net weight	Indoor		kg	54		
	Outdoor			105		
Ref.piping size	Liquid/Gas		ømm	9.52(3/8") / 15.88(5/8")		
Refrigerant line (one way) length			m	Max.100		
Vertical height differences		Outdoor is higher/lower	m	Max.30 / Max.15		
Outdoor operating temperature range		Cooling	°CDB	-15 to 43*3		
		Heating	°CWB	-20 to 20		
Air filter (option)				Filter kit : UM-FL3EF		
Remote control (option)				Wired:RC-EX3D, RC-E5, RC-ES1 Wireless:RCN-KIT4-E2		

NOTES:

The data are measured under the following conditions(ISO-T1).
Cooling:Indoor temp. of 27˚CDB, 19˚CWB, and outdoor temp. of 35˚CDB. Heating:Indoor temp. of 20˚CDB, and outdoor temp. of 7˚CDB, 6˚CWB.
*1 : Indicates the value in an anechoic chamber. During operation these values are somewhat higher due to ambient conditions.
*2 : External static pressure is changeable to be set by the remote control. MAX external static pressure is ''High static pressure'' setting. The values of sound pressure level become 5dB(A) higher at external static pressure of 100Pa.
*3 : If a cooling operation is conducted when the outdoor air temperature is –5˚C or lower, the outdoor unit should be installed at a place where it is not influenced by natural wind. If wind blows, the low pressure will drop and compressor frequency will increase, this will cause the capacity to drop and may cause the unit to break down.
*4 : The values are for one indoor unit operation. (Multi system only)

The values are for simultaneous Multi operation.

R410A				Hyper Inverter			
Set model name				FDUM100VNXPVH	FDUM125VNXPVH	FDUM140VNXPVH	FDUM140VNXTVH
					Twin		Triple
Indoor unit				FDUM50VH x 2	FDUM60VH x 2	FDUM71VH x 2	FDUM50VH x 3
Outdoor unit				FDC100VNX	FDC125VNX	FDC140VNX	FDC140VNX
Power source				1 Phase 220-240V, 50Hz / 220V, 60Hz			
Nominal cooling capacity (Min - Max)			kW	10.0 (4.0 - 11.2)	12.5 (5.0 - 14.0)	14.0 (5.0 - 16.0)	14.0 (5.0 - 16.0)
Nominal heating capacity (Min - Max)			kW	11.2 (4.0 - 12.5)	14.0 (4.0 - 17.0)	16.0 (4.0 - 18.0)	16.0 (4.0 - 18.0)
Power consumption		Cooling/Heating	kW	2.66 / 3.02	3.26 / 3.66	4.36 / 4.35	4.21 / 4.69
EER/COP		Cooling/Heating		3.76 / 3.71	3.83 / 3.83	3.21 / 3.68	3.33 / 3.41
Inrush current			A	5	5	5	5
Max. current				24	26	26	26
Sound power level*1	Indoor*4	Cooling/Heating	dB(A)	60 / 60	60 / 60	65 / 65	60 / 60
	Outdoor	Cooling/Heating		70 / 70	70 / 70	72 / 72	72 / 72
Sound pressure level*1	Indoor*4	Cooling (P-Hi/Hi/Me/Lo)		37 / 32 / 29 / 26	36 / 31 / 28 / 25	38 / 33 / 29 / 25	37 / 32 / 29 / 26
		Heating (P-Hi/Hi/Me/Lo)		37 / 32 / 29 / 26	36 / 31 / 28 / 25	38 / 33 / 29 / 25	37 / 32 / 29 / 26
	Outdoor	Cooling/Heating		48 / 50	48 / 50	49 / 52	49 / 52
Air flow	Indoor*4	Cooling (P-Hi/Hi/Me/Lo)	m^3/min	13 / 10 / 9 / 8	20 / 15 / 13 / 10	24 / 19 / 15 / 10	13 / 10 / 9 / 8
		Heating (P-Hi/Hi/Me/Lo)		13 / 10 / 9 / 8	20 / 15 / 13 / 10	24 / 19 / 15 / 10	13 / 10 / 9 / 8
	Outdoor	Cooling/Heating		100 / 100	100 / 100	100 / 100	100 / 100
External static pressure*2			Pa	Standard:35 Max:100			
Exterior dimensions	Indoor	HeightxWidthxDepth	mm	280 x 750 x 635	280 x 950 x 635		280 x 750 x 635
	Outdoor			1300 x 970 x 370			
Net weight	Indoor		kg	29	34		29
	Outdoor			105			
Ref.piping size	Liquid/Gas		ømm	9.52(3/8") / 15.88(5/8")			
Refrigerant line (one way) length			m	Max.100			
Vertical height differences		Outdoor is higher/lower	m	Max.30 / Max.15			
Outdoor operating temperature range		Cooling	°CDB	-15 to 43*3			
		Heating	°CWB	-20 to 20			
Air filter (option)				Filter kit : UM-FL1EF	Filter kit : UM-FL2EF		Filter kit : UM-FL1EF
Remote control (option)				Wired:RC-EX3D, RC-E5, RC-ES1 Wireless:RCN-KIT4-E2			

The values are for simultaneous Multi operation.

R410A				Hyper Inverter			
Set model name				FDUM100VSXPVH	FDUM125VSXPVH	FDUM140VSXPVH	FDUM140VSXTVH
					Twin		Triple
Indoor unit				FDUM50VH x 2	FDUM60VH x 2	FDUM71VH x 2	FDUM50VH x 3
Outdoor unit				FDC100VSX	FDC125VSX	FDC140VSX	FDC140VSX
Power source				3 Phase 380-415V, 50Hz / 380V, 60Hz			
Nominal cooling capacity (Min - Max)			kW	10.0 (4.0 - 11.2)	12.5 (5.0 - 14.0)	14.0 (5.0 - 16.0)	14.0 (5.0 - 16.0)
Nominal heating capacity (Min - Max)			kW	11.2 (4.0 - 16.0)	14.0 (4.0 - 18.0)	16.0 (4.0 - 20.0)	16.0 (4.0 - 20.0)
Power consumption		Cooling/Heating	kW	2.66 / 3.02	3.26 / 3.66	4.36 / 4.35	4.21 / 4.69
EER/COP		Cooling/Heating		3.76 / 3.71	3.83 / 3.83	3.21 / 3.68	3.33 / 3.41
Inrush current			A	5	5	5	5
Max. current				15	15	15	15
Sound power level*1	Indoor*4	Cooling/Heating	dB(A)	60 / 60	60 / 60	65 / 65	60 / 60
	Outdoor	Cooling/Heating		70 / 70	70 / 70	72 / 72	72 / 72
Sound pressure level*1	Indoor*4	Cooling (P-Hi/Hi/Me/Lo)		37 / 32 / 29 / 26	36 / 31 / 28 / 25	38 / 33 / 29 / 25	37 / 32 / 29 / 26
		Heating (P-Hi/Hi/Me/Lo)		37 / 32 / 29 / 26	36 / 31 / 28 / 25	38 / 33 / 29 / 25	37 / 32 / 29 / 26
	Outdoor	Cooling/Heating		48 / 50	48 / 50	49 / 52	49 / 52
Air flow	Indoor*4	Cooling (P-Hi/Hi/Me/Lo)	m^3/min	13 / 10 / 9 / 8	20 / 15 / 13 / 10	24 / 19 / 15 / 10	13 / 10 / 9 / 8
		Heating (P-Hi/Hi/Me/Lo)		13 / 10 / 9 / 8	20 / 15 / 13 / 10	24 / 19 / 15 / 10	13 / 10 / 9 / 8
	Outdoor	Cooling/Heating		100 / 100	100 / 100	100 / 100	100 / 100
External static pressure*2			Pa	Standard:35 Max:100			
Exterior dimensions	Indoor	HeightxWidthxDepth	mm	280 x 750 x 635	280 x 950 x 635		280 x 750 x 635
	Outdoor			1300 x 970 x 370			
Net weight	Indoor		kg	29	34		29
	Outdoor			105			
Ref.piping size	Liquid/Gas		ømm	9.52(3/8") / 15.88(5/8")			
Refrigerant line (one way) length			m	Max.100			
Vertical height differences		Outdoor is higher/lower	m	Max.30 / Max.15			
Outdoor operating temperature range		Cooling	°CDB	-15 to 43*3			
		Heating	°CWB	-20 to 20			
Air filter (option)				Filter kit : UM-FL1EF	Filter kit : UM-FL2EF		Filter kit : UM-FL1EF
Remote control (option)				Wired:RC-EX3D, RC-E5, RC-ES1 Wireless:RCN-KIT4-E2			

SPECIFICATIONS - FDUM -

R32				Micro Inverter		
Set model name				FDUM100VNAWVH	FDUM125VNAWVH	FDUM140VNAWVH
Indoor unit				FDUM100VH	FDUM125VH	FDUM140VH
Outdoor unit				FDC100VNA-W	FDC125VNA-W	FDC140VNA-W
Power source				1 Phase 220-240V, 50Hz / 220V, 60Hz		
Nominal cooling capacity (Min - Max)			kW	10.0 (4.0 - 11.2)	12.5 (5.0 - 14.0)	13.6 (5.0 - 14.5)
Nominal heating capacity (Min - Max)			kW	11.2 (4.0 - 12.5)	14.0 (4.0 - 16.0)	15.5 (4.0 - 16.5)
Power consumption		Cooling/Heating	kW	2.99 / 2.66	4.36 / 3.69	5.13 / 4.21
EER/COP		Cooling/Heating		3.35 / 4.21	2.87 / 3.79	2.65 / 3.68
Inrush current			A	5	5	5
Max. current				26	26	27
Sound power level*1	Indoor	Cooling/Heating	dB(A)	65 / 65	67 / 67	70 / 70
	Outdoor	Cooling/Heating		69 / 70	71 / 71	72 / 73
Sound pressure level*1	Indoor	Cooling (P-Hi/Hi/Me/Lo)		44 / 38 / 36 / 30	45 / 40 / 34 / 29	47 / 40 / 35 / 30
		Heating (P-Hi/Hi/Me/Lo)		44 / 38 / 36 / 30	45 / 40 / 34 / 29	47 / 40 / 35 / 30
	Outdoor	Cooling/Heating		54 / 55	54 / 56	56 / 58
Air flow	Indoor	Cooling (P-Hi/Hi/Me/Lo)	m^3/min	36 / 28 / 25 / 19	39 / 32 / 26 / 20	48 / 35 / 28 / 22
		Heating (P-Hi/Hi/Me/Lo)		36 / 28 / 25 / 19	39 / 32 / 26 / 20	48 / 35 / 28 / 22
	Outdoor	Cooling/Heating		75 / 73	75 / 73	75 / 73
External static pressure*2			Pa	Standard:60 Max:100		
Exterior dimensions	Indoor	HeightxWidthxDepth	mm	280 x 1370 x 740		
	Outdoor			845 x 970 x 370		
Net weight	Indoor		kg	54		
	Outdoor			77		
Ref.piping size	Liquid/Gas		ømm	9.52(3/8") / 15.88(5/8")		
Refrigerant line (one way) length			m	Max.50		
Vertical height differences		Outdoor is higher/lower	m	Max.50 / Max.15		
Outdoor operating temperature range		Cooling	°CDB	-15 to 50*3		
		Heating	°CWB	-20 to 20		
Air filter (option)				Filter kit : UM-FL3EF		
Remote control (option)				Wired:RC-EX3D, RC-E5, RC-ES1 Wireless:RCN-KIT4-E2		

R32				Micro Inverter		
Set model name				FDUM100VSAWVH	FDUM125VSAWVH	FDUM140VSAWVH
Indoor unit				FDUM100VH	FDUM125VH	FDUM140VH
Outdoor unit				FDC100VSA-W	FDC125VSA-W	FDC140VSA-W
Power source				3 Phase 380-415V, 50Hz / 380V, 60Hz		
Nominal cooling capacity (Min - Max)			kW	10.0 (4.0 - 11.2)	12.5 (5.0 - 14.0)	13.6 (5.0 - 14.5)
Nominal heating capacity (Min - Max)			kW	11.2 (4.0 - 12.5)	14.0 (4.0 - 16.0)	15.5 (4.0 - 16.5)
Power consumption		Cooling/Heating	kW	2.99 / 2.66	4.36 / 3.69	5.13 / 4.21
EER/COP		Cooling/Heating		3.35 / 4.21	2.87 / 3.79	2.65 / 3.68
Inrush current			A	5	5	5
Max. current				17	17	18
Sound power level*1	Indoor	Cooling/Heating	dB(A)	65 / 65	67 / 67	70 / 70
	Outdoor	Cooling/Heating		69 / 70	71 / 71	72 / 73
Sound pressure level*1	Indoor	Cooling (P-Hi/Hi/Me/Lo)		44 / 38 / 36 / 30	45 / 40 / 34 / 29	47 / 40 / 35 / 30
		Heating (P-Hi/Hi/Me/Lo)		44 / 38 / 36 / 30	45 / 40 / 34 / 29	47 / 40 / 35 / 30
	Outdoor	Cooling/Heating		54 / 55	54 / 56	56 / 58
Air flow	Indoor	Cooling (P-Hi/Hi/Me/Lo)	m^3/min	36 / 28 / 25 / 19	39 / 32 / 26 / 20	48 / 35 / 28 / 22
		Heating (P-Hi/Hi/Me/Lo)		36 / 28 / 25 / 19	39 / 32 / 26 / 20	48 / 35 / 28 / 22
	Outdoor	Cooling/Heating		75 / 73	75 / 73	75 / 73
External static pressure*2			Pa	Standard:60 Max:100		
Exterior dimensions	Indoor	HeightxWidthxDepth	mm	280 x 1370 x 740		
	Outdoor			845 x 970 x 370		
Net weight	Indoor		kg	54		
	Outdoor			78		
Ref.piping size	Liquid/Gas		ømm	9.52(3/8") / 15.88(5/8")		
Refrigerant line (one way) length			m	Max.50		
Vertical height differences		Outdoor is higher/lower	m	Max.50 / Max.15		
Outdoor operating temperature range		Cooling	°CDB	-15 to 50*3		
		Heating	°CWB	-20 to 20		
Air filter (option)				Filter kit : UM-FL3EF		
Remote control (option)				Wired:RC-EX3D, RC-E5, RC-ES1 Wireless:RCN-KIT4-E2		

NOTES:

The data are measured under the following conditions(ISO-T1, -H1).
Cooling:Indoor temp. of 27°CDB, 19°CWB, and outdoor temp. of 35°CDB. Heating:Indoor temp. of 20°CDB, and outdoor temp. of 7°CDB, 6°CWB.
*1 : Indicates the value in an anechoic chamber. During operation these values are somewhat higher due to ambient conditions.
*2 : External static pressure is changeable to be set by the remote control. MAX external static pressure is "High static pressure" setting. The values of sound pressure level become 5dB(A) higher at external static pressure of 100Pa.
*3 : If a cooling operation is conducted when the outdoor air temperature is –5°C or lower, the outdoor unit should be installed at a place where it is not influenced by natural wind. If wind blows, the low pressure will drop and compressor frequency will increase, this will cause the capacity to drop and may cause the unit to break down.
*4 : The values are for one indoor unit operation. (Multi system only)

The values are for simultaneous Multi operation.

R32				Micro Inverter			
Set model name				FDUM100VNAWPVH	FDUM125VNAWPVH	FDUM140VNAWPVH	FDUM140VNAWTVH
					Twin		Triple
Indoor unit				FDUM50VH x 2	FDUM60VH x 2	FDUM71VH x 2	FDUM50VH x 3
Outdoor unit				FDC100VNA-W	FDC125VNA-W	FDC140VNA-W	FDC140VNA-W
Power source				1 Phase 220-240V, 50Hz / 220V, 60Hz			
Nominal cooling capacity (Min - Max)			kW	10.0 (4.0 - 11.2)	12.5 (5.0 - 14.0)	13.6 (5.0 - 14.5)	13.6 (5.0 - 14.5)
Nominal heating capacity (Min - Max)			kW	11.2 (4.0 - 12.5)	14.0 (4.0 - 16.0)	15.5 (4.0 - 16.5)	15.5 (4.0 - 16.5)
Power consumption		Cooling/Heating	kW	3.25 / 3.04	4.53 / 3.52	5.02 / 4.20	5.02 / 4.20
EER/COP		Cooling/Heating		3.08 / 3.68	2.76 / 3.98	2.71 / 3.69	2.71 / 3.69
Inrush current			A	5	5	5	5
Max. current				26	26	27	27
Sound power level*1	Indoor*4	Cooling/Heating	dB(A)	60 / 60	60 / 60	65 / 65	60 / 60
	Outdoor	Cooling/Heating		69 / 70	71 / 71	72 / 73	72 / 73
Sound pressure level*1	Indoor*4	Cooling (P-Hi/Hi/Me/Lo)		37 / 32 / 29 / 26	36 / 31 / 28 / 25	38 / 33 / 29 / 25	37 / 32 / 29 / 26
		Heating (P-Hi/Hi/Me/Lo)		37 / 32 / 29 / 26	36 / 31 / 28 / 25	38 / 33 / 29 / 25	37 / 32 / 29 / 26
	Outdoor	Cooling/Heating		54 / 55	54 / 56	56 / 58	56 / 58
Air flow	Indoor*4	Cooling (P-Hi/Hi/Me/Lo)	m^3/min	13 / 10 / 9 / 8	20 / 15 / 13 / 10	24 / 19 / 15 / 10	13 / 10 / 9 / 8
		Heating (P-Hi/Hi/Me/Lo)		13 / 10 / 9 / 8	20 / 15 / 13 / 10	24 / 19 / 15 / 10	13 / 10 / 9 / 8
	Outdoor	Cooling/Heating		75 / 73	75 / 73	75 / 73	75 / 73
External static pressure*2			Pa	Standard:35 Max:100			
Exterior dimensions	Indoor	HeightxWidthxDepth	mm	280 x 750 x 635	280 x 950 x 635		280 x 750 x 635
	Outdoor			845 x 970 x 370			
Net weight	Indoor		kg	29	34		29
	Outdoor			77			
Ref.piping size	Liquid/Gas		ømm	9.52(3/8") / 15.88(5/8")			
Refrigerant line (one way) length			m	Max.50			
Vertical height differences		Outdoor is higher/lower	m	Max.50 / Max.15			
Outdoor operating temperature range		Cooling	°CDB	-15 to 50*3			
		Heating	°CWB	-20 to 20			
Air filter (option)				Filter kit : UM-FL1EF	Filter kit : UM-FL2EF		Filter kit : UM-FL1EF
Remote control (option)				Wired:RC-EX3D, RC-E5, RC-ES1 Wireless:RCN-KIT4-E2			

The values are for simultaneous Multi operation.

R32				Micro Inverter			
Set model name				FDUM100VSAWPVH	FDUM125VSAWPVH	FDUM140VSAWPVH	FDUM140VSAWTVH
					Twin		Triple
Indoor unit				FDUM50VH x 2	FDUM60VH x 2	FDUM71VH x 2	FDUM50VH x 3
Outdoor unit				FDC100VSA-W	FDC125VSA-W	FDC140VSA-W	FDC140VSA-W
Power source				3 Phase 380-415V, 50Hz / 380V, 60Hz			
Nominal cooling capacity (Min - Max)			kW	10.0 (4.0 - 11.2)	12.5 (5.0 - 14.0)	13.6 (5.0 - 14.5)	13.6 (5.0 - 14.5)
Nominal heating capacity (Min - Max)			kW	11.2 (4.0 - 12.5)	14.0 (4.0 - 16.0)	15.5 (4.0 - 16.5)	15.5 (4.0 - 16.5)
Power consumption		Cooling/Heating	kW	3.25 / 3.04	4.53 / 3.52	5.02 / 4.20	5.02 / 4.20
EER/COP		Cooling/Heating		3.08 / 3.68	2.76 / 3.98	2.71 / 3.69	2.71 / 3.69
Inrush current			A	5	5	5	5
Max. current				17	17	18	18
Sound power level*1	Indoor*4	Cooling/Heating	dB(A)	60 / 60	60 / 60	65 / 65	60 / 60
	Outdoor	Cooling/Heating		69 / 70	71 / 71	72 / 73	72 / 73
Sound pressure level*1	Indoor*4	Cooling (P-Hi/Hi/Me/Lo)		37 / 32 / 29 / 26	36 / 31 / 28 / 25	38 / 33 / 29 / 25	37 / 32 / 29 / 26
		Heating (P-Hi/Hi/Me/Lo)		37 / 32 / 29 / 26	36 / 31 / 28 / 25	38 / 33 / 29 / 25	37 / 32 / 29 / 26
	Outdoor	Cooling/Heating		54 / 55	54 / 56	56 / 58	56 / 58
Air flow	Indoor*4	Cooling (P-Hi/Hi/Me/Lo)	m^3/min	13 / 10 / 9 / 8	20 / 15 / 13 / 10	24 / 19 / 15 / 10	13 / 10 / 9 / 8
		Heating (P-Hi/Hi/Me/Lo)		13 / 10 / 9 / 8	20 / 15 / 13 / 10	24 / 19 / 15 / 10	13 / 10 / 9 / 8
	Outdoor	Cooling/Heating		75 / 73	75 / 73	75 / 73	75 / 73
External static pressure*2			Pa	Standard:35 Max:100			
Exterior dimensions	Indoor	HeightxWidthxDepth	mm	280 x 750 x 635	280 x 950 x 635		280 x 750 x 635
	Outdoor			845 x 970 x 370			
Net weight	Indoor		kg	29	34		29
	Outdoor			78			
Ref.piping size	Liquid/Gas		ømm	9.52(3/8") / 15.88(5/8")			
Refrigerant line (one way) length			m	Max.50			
Vertical height differences		Outdoor is higher/lower	m	Max.50 / Max.15			
Outdoor operating temperature range		Cooling	°CDB	-15 to 50*3			
		Heating	°CWB	-20 to 20			
Air filter (option)				Filter kit : UM-FL1EF	Filter kit : UM-FL2EF		Filter kit : UM-FL1EF
Remote control (option)				Wired:RC-EX3D, RC-E5, RC-ES1 Wireless:RCN-KIT4-E2			

SPECIFICATIONS - FDUM -

The values are for simultaneous Multi operation.

R32				Micro Inverter			
Set model name				FDUM200VSAWPVH	FDUM250VSAWPVH	FDUM280VSAWPVH	FDUM200VSAWTVH
				Twin			Triple
Indoor unit				FDUM100VH x 2	FDUM125VH x 2	FDUM140VH x 2	FDUM71VH x 3
Outdoor unit				FDC200VSA-W	FDC250VSA-W	FDC280VSA-W	FDC200VSA-W
Power source				3 Phase 380-415V, 50Hz / 380V, 60Hz			
Nominal cooling capacity (Min - Max)			kW	20.0 (6.8 - 22.4)	25.0 (6.8 - 28.0)	27.0 (7.8 - 31.5)	20.0 (6.8 - 22.4)
Nominal heating capacity (Min - Max)			kW	22.4 (6.7 - 25.0)	28.0 (5.2 - 31.5)	30.0 (6.3 - 33.5)	22.4 (6.7 - 25.0)
Power consumption		Cooling/Heating	kW	6.58 / 5.59	8.74 / 7.90	10.05 / 8.47	6.58 / 5.59
EER/COP		Cooling/Heating		3.04 / 4.01	2.86 / 3.54	2.69 / 3.54	3.04 / 4.01
Inrush current			A	5	5	5	5
Max. current				19	25	22	19
Sound power level*1	Indoor*4	Cooling/Heating	dB(A)	65 / 65	67 / 67	70 / 70	65 / 65
	Outdoor	Cooling/Heating		72 / 74	73 / 75	75 / 77	72 / 74
Sound pressure level*1	Indoor*4	Cooling (P-Hi/Hi/Me/Lo)		44 / 38 / 36 / 30	45 / 40 / 34 / 29	47 / 40 / 35 / 30	38 / 33 / 29 / 25
		Heating (P-Hi/Hi/Me/Lo)		44 / 38 / 36 / 30	45 / 40 / 34 / 29	47 / 40 / 35 / 30	38 / 33 / 29 / 25
	Outdoor	Cooling/Heating		58 / 59	58 / 62	61 / 63	58 / 59
Air flow	Indoor*4	Cooling (P-Hi/Hi/Me/Lo)	m^3/min	36 / 28 / 25 / 19	39 / 32 / 26 / 20	48 / 35 / 28 / 22	24 / 19 / 15 / 10
		Heating (P-Hi/Hi/Me/Lo)		36 / 28 / 25 / 19	39 / 32 / 26 / 20	48 / 35 / 28 / 22	24 / 19 / 15 / 10
	Outdoor	Cooling/Heating		148 / 134	148 / 153	136 / 140	148 / 134
External static pressure*2			Pa	Standard:60 Max:100			Standard:35 Max:100
Exterior dimensions	Indoor	HeightxWidthxDepth	mm	280 x 1370 x 740			280 x 950 x 635
	Outdoor			1505 x 970 x 370			
Net weight	Indoor		kg	54			34
	Outdoor			144	145	155	144
Ref.piping size	Liquid/Gas		ømm	9.52(3/8") / 22.22(7/8")	12.7(1/2") / 22.22(7/8")		9.52(3/8") / 22.22(7/8")
Refrigerant line (one way) length			m	Max.70		Max.60	Max.70
Vertical height differences		Outdoor is higher/lower	m	Max.50*5 / Max.15			
Outdoor operating temperature range		Cooling	°CDB	-15 to 50*3			
		Heating	°CWB	-20 to 20			
Air filter (option)				Filter kit : UM-FL3EF			Filter kit : UM-FL2EF
Remote control (option)				Wired:RC-EX3D, RC-E5, RC-ES1 Wireless:RCN-KIT4-E2			

R410A				Micro Inverter		
Set model name				FDUM100VNAVH	FDUM125VNAVH	FDUM140VNAVH
Indoor unit				FDUM100VH	FDUM125VH	FDUM140VH
Outdoor unit				FDC100VNA	FDC125VNA	FDC140VNA
Power source				1 Phase 220-240V, 50Hz / 220V, 60Hz		
Nominal cooling capacity (Min - Max)			kW	10.0 (4.0 - 11.2)	12.5 (5.0 - 14.0)	13.6 (5.0 - 14.5)
Nominal heating capacity (Min - Max)			kW	11.2 (4.0 - 12.5)	14.0 (4.0 - 16.0)	15.5 (4.0 - 16.5)
Power consumption		Cooling/Heating	kW	2.84 / 2.78	4.36 / 3.69	4.93 / 4.21
EER/COP		Cooling/Heating		3.52 / 4.03	2.87 / 3.79	2.76 / 3.68
Inrush current			A	5	5	5
Max. current				26	26	27
Sound power level*1	Indoor	Cooling/Heating	dB(A)	65 / 65	67 / 67	70 / 70
	Outdoor	Cooling/Heating		70 / 70	71 / 71	73 / 73
Sound pressure level*1	Indoor	Cooling (P-Hi/Hi/Me/Lo)		44 / 38 / 36 / 30	45 / 40 / 34 / 29	47 / 40 / 35 / 30
		Heating (P-Hi/Hi/Me/Lo)		44 / 38 / 36 / 30	45 / 40 / 34 / 29	47 / 40 / 35 / 30
	Outdoor	Cooling/Heating		54 / 56	55 / 57	57 / 59
Air flow	Indoor	Cooling (P-Hi/Hi/Me/Lo)	m^3/min	36 / 28 / 25 / 19	39 / 32 / 26 / 20	48 / 35 / 28 / 22
		Heating (P-Hi/Hi/Me/Lo)		36 / 28 / 25 / 19	39 / 32 / 26 / 20	48 / 35 / 28 / 22
	Outdoor	Cooling/Heating		75 / 73	75 / 73	75 / 73
External static pressure*2			Pa	Standard:60 Max:100		
Exterior dimensions	Indoor	HeightxWidthxDepth	mm	280 x 1370 x 740		
	Outdoor			845 x 970 x 370		
Net weight	Indoor		kg	54		
	Outdoor			80		
Ref.piping size	Liquid/Gas		ømm	9.52(3/8") / 15.88(5/8")		
Refrigerant line (one way) length			m	Max.50		
Vertical height differences		Outdoor is higher/lower	m	Max.50 / Max.15		
Outdoor operating temperature range		Cooling	°CDB	-15 to 50*3		
		Heating	°CWB	-20 to 20		
Air filter (option)				Filter kit : UM-FL3EF		
Remote control (option)				Wired:RC-EX3D, RC-E5, RC-ES1 Wireless:RCN-KIT4-E2		

NOTES:

The data are measured under the following conditions(R32 : ISO-T1, -H1 / R410A : ISO-T1).
Cooling:Indoor temp. of 27°CDB, 19°CWB, and outdoor temp. of 35°CDB. Heating:Indoor temp. of 20°CDB, and outdoor temp. of 7°CDB, 6°CWB.
*1 : Indicates the value in an anechoic chamber. During operation these values are somewhat higher due to ambient conditions.
*2 : External static pressure is changeable to be set by the remote control. MAX external static pressure is "High static pressure" setting. The values of sound pressure level become 5dB(A) higher at external static pressure of 100Pa.
*3 : If a cooling operation is conducted when the outdoor air temperature is –5°C or lower, the outdoor unit should be installed at a place where it is not influenced by natural wind. If wind blows, the low pressure will drop and compressor frequency will increase, this will cause the capacity to drop and may cause the unit to break down.
*4 : The values are for one indoor unit operation. (Multi system only)
*5 : In case of following conditions:Max.50m(Outdoor unit is higher & Outdoor temperature ≦ 43°C), Max.30m(Outdoor unit is higher & Outdoor temperature > 43°C)

R410A				Micro Inverter		
Set model name				FDUM100VSAVH	FDUM125VSAVH	FDUM140VSAVH
Indoor unit				FDUM100VH	FDUM125VH	FDUM140VH
Outdoor unit				FDC100VSA	FDC125VSA	FDC140VSA
Power source				3 Phase 380-415V, 50Hz / 380V, 60Hz		
Nominal cooling capacity (Min - Max)			kW	10.0 (4.0 - 11.2)	12.5 (5.0 - 14.0)	13.6 (5.0 - 14.5)
Nominal heating capacity (Min - Max)			kW	11.2 (4.0 - 12.5)	14.0 (4.0 - 16.0)	15.5 (4.0 - 16.5)
Power consumption		Cooling/Heating	kW	2.84 / 2.78	4.36 / 3.69	4.93 / 4.21
EER/COP		Cooling/Heating		3.52 / 4.03	2.87 / 3.79	2.76 / 3.68
Inrush current			A	5	5	5
Max. current				17	17	18
Sound power level*1	Indoor	Cooling/Heating	dB(A)	65 / 65	67 / 67	70 / 70
	Outdoor	Cooling/Heating		70 / 70	71 / 71	73 / 73
Sound pressure level*1	Indoor	Cooling (P-Hi/Hi/Me/Lo)		44 / 38 / 36 / 30	45 / 40 / 34 / 29	47 / 40 / 35 / 30
		Heating (P-Hi/Hi/Me/Lo)		44 / 38 / 36 / 30	45 / 40 / 34 / 29	47 / 40 / 35 / 30
	Outdoor	Cooling/Heating		54 / 56	55 / 57	57 / 59
Air flow	Indoor	Cooling (P-Hi/Hi/Me/Lo)	m^3/min	36 / 28 / 25 / 19	39 / 32 / 26 / 20	48 / 35 / 28 / 22
		Heating (P-Hi/Hi/Me/Lo)		36 / 28 / 25 / 19	39 / 32 / 26 / 20	48 / 35 / 28 / 22
	Outdoor	Cooling/Heating		75 / 73	75 / 73	75 / 73
External static pressure*2			Pa	Standard:60 Max:100		
Exterior dimensions	Indoor	HeightxWidthxDepth	mm	280 x 1370 x 740		
	Outdoor			845 x 970 x 370		
Net weight	Indoor		kg	54		
	Outdoor			82		
Ref.piping size	Liquid/Gas		ømm	9.52(3/8") / 15.88(5/8")		
Refrigerant line (one way) length			m	Max.50		
Vertical height differences		Outdoor is higher/lower	m	Max.50 / Max.15		
Outdoor operating temperature range		Cooling	°CDB	-15 to 50*3		
		Heating	°CWB	-20 to 20		
Air filter (option)				Filter kit : UM-FL3EF		
Remote control (option)				Wired:RC-EX3D, RC-E5, RC-ES1 Wireless:RCN-KIT4-E2		

The values are for simultaneous Multi operation.

R410A				Micro Inverter			
Set model name				FDUM100VNAPVH	FDUM125VNAPVH	FDUM140VNAPVH	FDUM140VNATVH
				Twin			Triple
Indoor unit				FDUM50VH x 2	FDUM60VH x 2	FDUM71VH x 2	FDUM50VH x 3
Outdoor unit				FDC100VNA	FDC125VNA	FDC140VNA	FDC140VNA
Power source				1 Phase 220-240V, 50Hz / 220V, 60Hz			
Nominal cooling capacity (Min - Max)			kW	10.0 (4.0 - 11.2)	12.5 (5.0 - 14.0)	13.6 (5.0 - 14.5)	13.6 (5.0 - 14.5)
Nominal heating capacity (Min - Max)			kW	11.2 (4.0 - 12.5)	14.0 (4.0 - 16.0)	15.5 (4.0 - 16.5)	15.5 (4.0 - 16.5)
Power consumption		Cooling/Heating	kW	3.25 / 3.21	4.53 / 3.75	5.02 / 4.20	5.02 / 4.20
EER/COP		Cooling/Heating		3.08 / 3.49	2.76 / 3.73	2.71 / 3.69	2.71 / 3.69
Inrush current			A	5	5	5	5
Max. current				26	26	27	27
Sound power level*1	Indoor*4	Cooling/Heating	dB(A)	60 / 60	60 / 60	65 / 65	60 / 60
	Outdoor	Cooling/Heating		70 / 70	71 / 71	73 / 73	73 / 73
Sound pressure level*1	Indoor*4	Cooling (P-Hi/Hi/Me/Lo)		37 / 32 / 29 / 26	36 / 31 / 28 / 25	38 / 33 / 29 / 25	37 / 32 / 29 / 26
		Heating (P-Hi/Hi/Me/Lo)		37 / 32 / 29 / 26	36 / 31 / 28 / 25	38 / 33 / 29 / 25	37 / 32 / 29 / 26
	Outdoor	Cooling/Heating		54 / 56	55 / 57	57 / 59	57 / 59
Air flow	Indoor*4	Cooling (P-Hi/Hi/Me/Lo)	m^3/min	13 / 10 / 9 / 8	20 / 15 / 13 / 10	24 / 19 / 15 / 10	13 / 10 / 9 / 8
		Heating (P-Hi/Hi/Me/Lo)		13 / 10 / 9 / 8	20 / 15 / 13 / 10	24 / 19 / 15 / 10	13 / 10 / 9 / 8
	Outdoor	Cooling/Heating		75 / 73	75 / 73	75 / 73	75 / 73
External static pressure*2			Pa	Standard:35 Max:100			
Exterior dimensions	Indoor	HeightxWidthxDepth	mm	280 x 750 x 635	280 x 950 x 635		280 x 750 x 635
	Outdoor			845 x 970 x 370			
Net weight	Indoor		kg	29	34		29
	Outdoor			80			
Ref.piping size	Liquid/Gas		ømm	9.52(3/8") / 15.88(5/8")			
Refrigerant line (one way) length			m	Max.50			
Vertical height differences		Outdoor is higher/lower	m	Max.50 / Max.15			
Outdoor operating temperature range		Cooling	°CDB	-15 to 50*3			
		Heating	°CWB	-20 to 20			
Air filter (option)				Filter kit : UM-FL1EF	Filter kit : UM-FL2EF		Filter kit : UM-FL1EF
Remote control (option)				Wired:RC-EX3D, RC-E5, RC-ES1 Wireless:RCN-KIT4-E2			

SPECIFICATIONS - FDUM -

The values are for simultaneous Multi operation.

R410A				Micro Inverter			
Set model name				FDUM100VSAPVH	FDUM125VSAPVH	FDUM140VSAPVH	FDUM140VSATVH
					Twin		Triple
Indoor unit				FDUM50VH x 2	FDUM60VH x 2	FDUM71VH x 2	FDUM50VH x 3
Outdoor unit				FDC100VSA	FDC125VSA	FDC140VSA	FDC140VSA
Power source				3 Phase 380-415V, 50Hz / 380V, 60Hz			
Nominal cooling capacity (Min - Max)			kW	10.0 (4.0 - 11.2)	12.5 (5.0 - 14.0)	13.6 (5.0 - 14.5)	13.6 (5.0 - 14.5)
Nominal heating capacity (Min - Max)			kW	11.2 (4.0 - 12.5)	14.0 (4.0 - 16.0)	15.5 (4.0 - 16.5)	15.5 (4.0 - 16.5)
Power consumption		Cooling/Heating	kW	3.25 / 3.21	4.53 / 3.75	5.02 / 4.20	5.02 / 4.20
EER/COP		Cooling/Heating		3.08 / 3.49	2.76 / 3.73	2.71 / 3.69	2.71 / 3.69
Inrush current			A	5	5	5	5
Max. current				17	17	18	18
Sound power level*1	Indoor*4	Cooling/Heating	dB(A)	60 / 60	60 / 60	65 / 65	60 / 60
	Outdoor	Cooling/Heating		70 / 70	71 / 71	73 / 73	73 / 73
Sound pressure level*1	Indoor*4	Cooling (P-Hi/Hi/Me/Lo)		37 / 32 / 29 / 26	36 / 31 / 28 / 25	38 / 33 / 29 / 25	37 / 32 / 29 / 26
		Heating (P-Hi/Hi/Me/Lo)		37 / 32 / 29 / 26	36 / 31 / 28 / 25	38 / 33 / 29 / 25	37 / 32 / 29 / 26
	Outdoor	Cooling/Heating		54 / 56	55 / 57	57 / 59	57 / 59
Air flow	Indoor*4	Cooling (P-Hi/Hi/Me/Lo)	m^3/min	13 / 10 / 9 / 8	20 / 15 / 13 / 10	24 / 19 / 15 / 10	13 / 10 / 9 / 8
		Heating (P-Hi/Hi/Me/Lo)		13 / 10 / 9 / 8	20 / 15 / 13 / 10	24 / 19 / 15 / 10	13 / 10 / 9 / 8
	Outdoor	Cooling/Heating		75 / 73	75 / 73	75 / 73	75 / 73
External static pressure*2			Pa	Standard:35 Max:100			
Exterior dimensions	Indoor	HeightxWidthxDepth	mm	280 x 750 x 635	280 x 950 x 635		280 x 750 x 635
	Outdoor			845 x 970 x 370			
Net weight	Indoor		kg	29	34		29
	Outdoor			82			
Ref.piping size	Liquid/Gas		ømm	9.52(3/8") / 15.88(5/8")			
Refrigerant line (one way) length			m	Max.50			
Vertical height differences		Outdoor is higher/lower	m	Max.50 / Max.15			
Outdoor operating temperature range		Cooling	°CDB	-15 to 50*3			
		Heating	°CWB	-20 to 20			
Air filter (option)				Filter kit : UM-FL1EF	Filter kit : UM-FL2EF		Filter kit : UM-FL1EF
Remote control (option)				Wired:RC-EX3D, RC-E5, RC-ES1 Wireless:RCN-KIT4-E2			

The values are for simultaneous Multi operation.

R410A				Micro Inverter		
Set model name				FDUM200VSAPVH	FDUM250VSAPVH	FDUM200VSATVH
				Twin		Triple
Indoor unit				FDUM100VH x 2	FDUM125VH x 2	FDUM71VH x 3
Outdoor unit				FDC200VSA	FDC250VSA	FDC200VSA
Power source				3 Phase 380-415V, 50Hz / 380V, 60Hz		
Nominal cooling capacity (Min - Max)			kW	19.0 (5.2 - 22.4)	24.0 (6.9 - 28.0)	19.0 (5.2 - 22.4)
Nominal heating capacity (Min - Max)			kW	22.4 (3.3 - 25.0)	27.0 (5.5 - 31.5)	22.4 (3.3 - 25.0)
Power consumption		Cooling/Heating	kW	6.51 / 6.04	8.33 / 7.52	6.46 / 6.15
EER/COP		Cooling/Heating		2.92 / 3.71	2.88 / 3.59	2.94 / 3.64
Inrush current			A	5	5	5
Max. current				22	24	22
Sound power level*1	Indoor*4	Cooling/Heating	dB(A)	65 / 65	67 / 67	65 / 65
	Outdoor	Cooling/Heating		72 / 74	73 / 75	72 / 74
Sound pressure level*1	Indoor*4	Cooling (P-Hi/Hi/Me/Lo)		44 / 38 / 36 / 30	45 / 40 / 34 / 29	38 / 33 / 29 / 25
		Heating (P-Hi/Hi/Me/Lo)		44 / 38 / 36 / 30	45 / 40 / 34 / 29	38 / 33 / 29 / 25
	Outdoor	Cooling/Heating		58 / 59	59 / 62	58 / 59
Air flow	Indoor*4	Cooling (P-Hi/Hi/Me/Lo)	m^3/min	36 / 28 / 25 / 19	39 / 32 / 26 / 20	24 / 19 / 15 / 10
		Heating (P-Hi/Hi/Me/Lo)		36 / 28 / 25 / 19	39 / 32 / 26 / 20	24 / 19 / 15 / 10
	Outdoor	Cooling/Heating		135 / 135	143 / 151	135 / 135
External static pressure*2			Pa	Standard:60 Max:100		Standard:35 Max:100
Exterior dimensions	Indoor	HeightxWidthxDepth	mm	280 x 1370 x 740		280 x 950 x 635
	Outdoor			1300 x 970 x 370	1505 x 970 x 370	1300 x 970 x 370
Net weight	Indoor		kg	54		34
	Outdoor			115	143	115
Ref.piping size	Liquid/Gas		ømm	9.52(3/8") / 22.22(7/8")	12.7(1/2") / 22.22(7/8")	9.52(3/8") / 22.22(7/8")
Refrigerant line (one way) length			m	Max.70		
Vertical height differences		Outdoor is higher/lower	m	Max.30 / Max.15		
Outdoor operating temperature range		Cooling	°CDB	-15 to 50*3		
		Heating	°CWB	-15 to 20		
Air filter (option)				Filter kit : UM-FL3EF		Filter kit : UM-FL2EF
Remote control (option)				Wired:RC-EX3D, RC-E5, RC-ES1 Wireless:RCN-KIT4-E2		

NOTES:

The data are measured under the following conditions(R32 : ISO-T1, -H1 / R410A : ISO-T1).
Cooling:Indoor temp. of 27°CDB, 19°CWB, and outdoor temp. of 35°CDB. Heating:Indoor temp. of 20°CDB, and outdoor temp. of 7°CDB, 6°CWB.

*1 : Indicates the value in an anechoic chamber. During operation these values are somewhat higher due to ambient conditions.

*2 : External static pressure is changeable to be set by the remote control. MAX external static pressure is "High static pressure" setting. The values of sound pressure level become 5dB(A) higher at external static pressure of 100Pa.

*3 : If a cooling operation is conducted when the outdoor air temperature is –5°C or lower, the outdoor unit should be installed at a place where it is not influenced by natural wind. If wind blows, the low pressure will drop and compressor frequency will increase, this will cause the capacity to drop and may cause the unit to break down.

*4 : The values are for one indoor unit operation. (Multi system only)

R32				Standard Inverter			
Set model name				FDUM71VNPWVH	FDUM90VNPWVH	FDUM100VNPWVH	FDUM125VNPWVH
Indoor unit				FDUM71VH	FDUM100VH	FDUM100VH	FDUM125VH
Outdoor unit				FDC71VNP-W	FDC90VNP-W	FDC100VNP-W	FDC125VNP-W
Power source				1 Phase 220-240V, 50Hz / 220V, 60Hz			
Nominal cooling capacity (Min - Max)			kW	7.1 (1.5 - 7.3)	9.0 (2.1 - 9.5)	10.0 (2.1 - 10.2)	12.1 (5.0 - 12.1)
Nominal heating capacity (Min - Max)			kW	7.1 (1.1 - 7.3)	9.0 (1.7 - 9.5)	10.0 (1.7 - 10.4)	12.1 (4.0 - 13.3)
Power consumption		Cooling/Heating	kW	2.60 / 1.89	2.62 / 1.98	3.08 / 2.45	3.85 / 3.28
EER/COP		Cooling/Heating		2.73 / 3.76	3.44 / 4.55	3.25 / 4.08	3.14 / 3.69
Inrush current			A	5	5	5	5
Max. current				15.8	19	19	20
Sound power level*1	Indoor	Cooling/Heating	dB(A)	65 / 65	65 / 65	65 / 65	67 / 67
	Outdoor	Cooling/Heating		67 / 67	67 / 66	68 / 67	73 / 72
Sound pressure level*1	Indoor	Cooling (P-Hi/Hi/Me/Lo)		38 / 33 / 29 / 25	44 / 38 / 36 / 30	44 / 38 / 36 / 30	45 / 40 / 34 / 29
		Heating (P-Hi/Hi/Me/Lo)		38 / 33 / 29 / 25	44 / 38 / 36 / 30	44 / 38 / 36 / 30	45 / 40 / 34 / 29
	Outdoor	Cooling/Heating		54 / 54	55 / 53	56 / 54	57 / 57
Air flow	Indoor	Cooling (P-Hi/Hi/Me/Lo)	m^3/min	24 / 19 / 15 / 10	36 / 28 / 25 / 19	36 / 28 / 25 / 19	39 / 32 / 26 / 20
		Heating (P-Hi/Hi/Me/Lo)		24 / 19 / 15 / 10	36 / 28 / 25 / 19	36 / 28 / 25 / 19	39 / 32 / 26 / 20
	Outdoor	Cooling/Heating		42 / 42	59 / 55	63 / 55	75 / 79
External static pressure*2			Pa	Standard:35 Max:100	Standard:60 Max:100		
Exterior dimensions	Indoor	HeightxWidthxDepth	mm	280 x 950 x 635	280 x 1370 x 740		
	Outdoor			640 x 800(+71) x 290	750 x 880(+88) x 340		845 x 970 x 370
Net weight	Indoor		kg	34	54		
	Outdoor			45	57		73
Ref.piping size	Liquid/Gas		ømm	6.35(1/4") / 12.7(1/2")	6.35(1/4") / 15.88(5/8")		9.52(3/8") / 15.88(5/8")
Refrigerant line (one way) length			m	Max.30			
Vertical height differences		Outdoor is higher/lower	m	Max.20 / Max.20			
Outdoor operating temperature range		Cooling	°CDB	-15 to 46*3			
		Heating	°CWB	-15 to 20			
Air filter (option)				Filter kit : UM-FL2EF	Filter kit : UM-FL3EF		
Remote control (option)				Wired:RC-EX3D, RC-E5, RC-ES1 Wireless:RCN-KIT4-E2			

SRK

Intdoor Unit
Wall Mounted

SRK 50•60
Only used with Multi System.



SRK 71·100
Common to the both case of Single and Multi



Wireless LAN Built-in
SRK 71·100
Only connected to R32 outdoor unit.





Wireless remote control



Energy Saving
Home Leave
Hi Power
Silent Operation
Flap Control
Weekly Timer

R410A
R32
Hybrid

Remote control (Option)

Wired



RC-EX3D



RC-E5

New!



RC-ES1

*Not all functions available with all remote control options.

Elegant Timeless Design

The SRK series air-conditioners have been innovatively designed with rounded contours that fit beautifully into any of Europe's diverse interior settings.
The design was created by the Italian industrial design studio Tensa srl, based in Milan, to respond to a broad spectrum of requirements.(SRK50·60)

Jet Air Technology

We used the same aerodynamic analysis technology as used in developing jet engines.



CFD (computational fluid dynamics), commonly used for precision jet engine blade design, has now transformed airconditioning.
Our cutting-edge indoor air distribution system ensures very quiet operation and unparalleled energy efficiency across diverse indoor spaces.

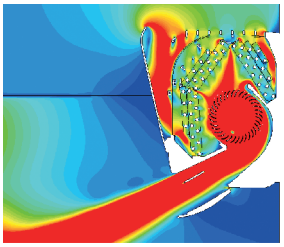

Fast ⟷ Slow

Colours in the figure show the air speed

Long Reach Air Flow

Long reach airflow is achieved by Jet technology.
Good for large living rooms and shops, which increases comfort.



Indoor Unit Connection

Up to three indoor units are connectable to one outdoor unit.

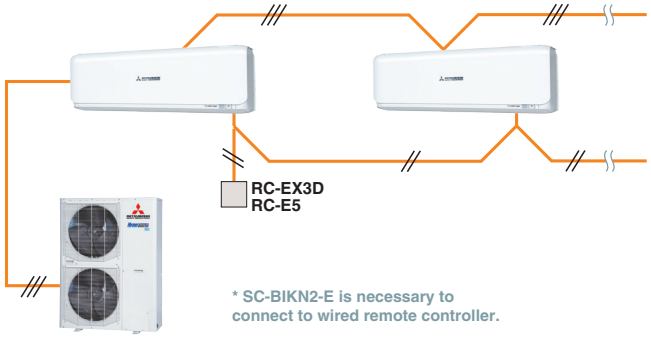

* SC-BIKN2-E is necessary to connect to wired remote controller.

Flap Control System

The flap can swing within the range of upper and lower flap position selected.

* The wireless remote control is not applicable to the flap control system.

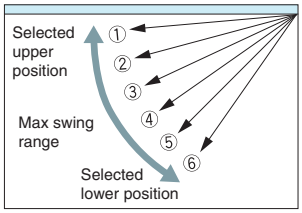

SC-BIKN2-E connection (Option)

Interface kit can be built into indoor unit.(SRK50·60)

* SC-BIKN2-E cannot be used simultaneously with the Wireless LAN control system

OUTDOOR UNIT

		Hyper Inverter		Micro Inverter		
FDC	R32	71VNX-W	100-140VN(S)X-W	100-140VN(S)A-W	–	200VSA-W
	R410A	–	100-140VN(S)X	100VN(S)A	200VSA	–
model						
Chargeless		30m		30m		
Height x Width x Depth (mm)		750 x 880(+88) x 340	1300 x 970 x 370	845 x 970 x 370	1300 x 970 x 370	1505 x 970 x 370

		Standard Inverter	
FDC	R32	71VNP-W	100VNP-W
	R410A	–	–
model			
Chargeless		15m	
Height x Width x Depth (mm)		640 x 800(+71) x 290	750 x 880(+88) x 340

DIMENSIONS (Unit:mm) - SRK -

Models SRK50ZSX-W, 60ZSX-W

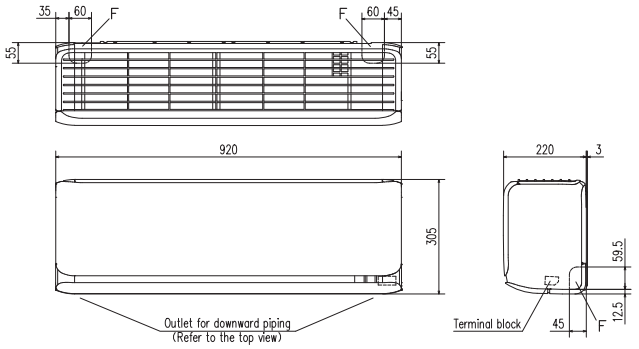

Symbol	Content	
A	Gas piping	ϕ12.7 (1/2") (Flare)
B	Liquid piping	ϕ6.35 (1/4") (Flare)
C	Hole on wall for right rear piping	(ϕ65)
D	Hole on wall for left rear piping	(ϕ65)
E	Drain hose	VP16
F	Outlet for piping	

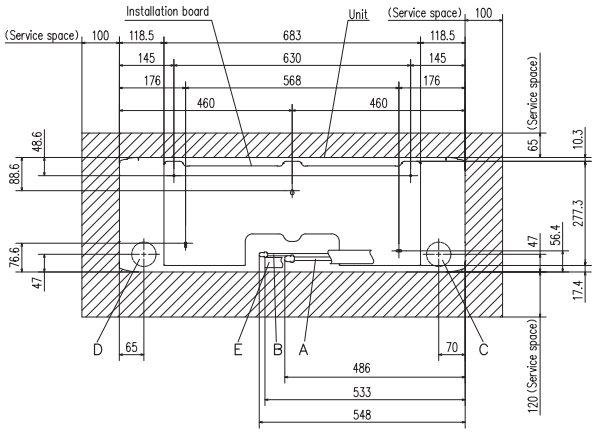

Space for installation and service when viewing from the front

Models SRK71ZR-W, 71ZR-WF, 100ZR-W, 100ZR-WF

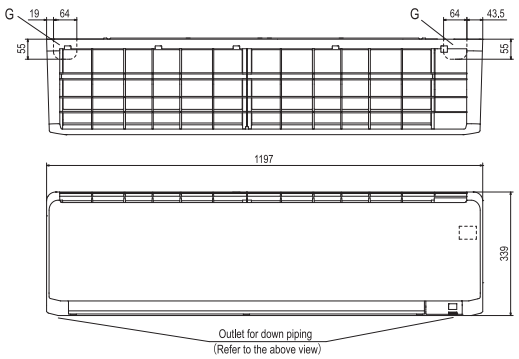

Symbol	Content	
A	Gas piping	ϕ15.88 (5/8") (Flare)
B	Liquid piping	71:ϕ6.35(1/4")(Flare) 100:ϕ9.52(3/8")(Flare)
C	Hole on wall for right rear piping	(ϕ65)
D	Hole on wall for left rear piping	(ϕ65)
E	Drain hose	VP16
F	Outlet for wiring (on both side)	
G	Outlet for piping (on both side)	

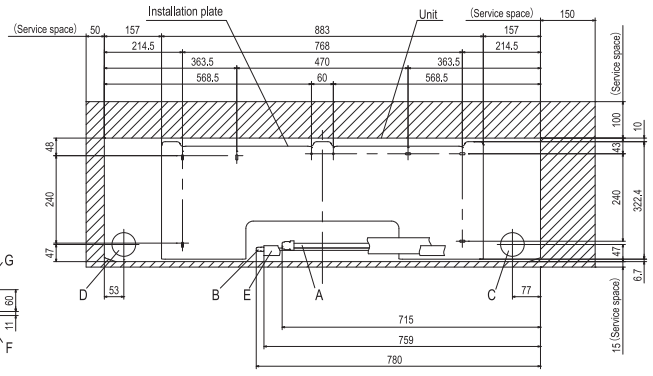

Space for installation and service when viewing from the front

SPECIFICATIONS - SRK -

R32				Hyper Inverter					
Set model name				SRK71VNXWZRF	SRK71VNXWZR	SRK100VNXWZRF	SRK100VNXWZR	SRK100VSXWZRF	SRK100VSXWZR
Indoor unit				SRK71ZR-WF	SRK71ZR-W	SRK100ZR-WF	SRK100ZR-W	SRK100ZR-WF	SRK100ZR-W
Outdoor unit				FDC71VNX-W	FDC71VNX-W	FDC100VNX-W	FDC100VNX-W	FDC100VSX-W	FDC100VSX-W
Power source				1 Phase 220-240V, 50Hz / 220V, 60Hz				3 Phase 380-415V, 50Hz / 380V, 60Hz	
Nominal cooling capacity (Min - Max)			kW	7.1 (3.2 - 8.0)	7.1 (3.2 - 8.0)	10.0 (3.5 - 11.2)	10.0 (3.5 - 11.2)	10.0 (3.5 - 11.2)	10.0 (3.5 - 11.2)
Nominal heating capacity (Min - Max)			kW	8.0 (3.6 - 9.0)	8.0 (3.6 - 9.0)	11.2 (2.7 - 12.5)	11.2 (2.7 - 12.5)	11.2 (2.7 - 16.0)	11.2 (2.7 - 16.0)
Power consumption		Cooling/Heating	kW	1.93 / 1.78	1.93 / 1.78	2.74 / 3.04	2.74 / 3.04	2.74 / 3.04	2.74 / 3.04
EER/COP		Cooling/Heating		3.68 / 4.49	3.68 / 4.49	3.65 / 3.69	3.65 / 3.69	3.65 / 3.69	3.65 / 3.69
Inrush current			A	5	5	5	5	5	5
Max. current				19.1	19.1	25	25	14	14
Sound power level*1	Indoor	Cooling/Heating	dB(A)	57 / 60	57 / 60	63 / 63	63 / 63	63 / 63	63 / 63
	Outdoor	Cooling/Heating		66 / 66	66 / 66	67 / 67	67 / 67	67 / 67	67 / 67
Sound pressure level*1	Indoor	Cooling (Hi/Me/Lo/Ulo)		44 / 41 / 37 / 25	44 / 41 / 37 / 25	48 / 45 / 40 / 27	48 / 45 / 40 / 27	48 / 45 / 40 / 27	48 / 45 / 40 / 27
		Heating (Hi/Me/Lo/Ulo)		46 / 39 / 35 / 28	46 / 39 / 35 / 28	48 / 43 / 38 / 30	48 / 43 / 38 / 30	48 / 43 / 38 / 30	48 / 43 / 38 / 30
	Outdoor	Cooling/Heating		51 / 51	51 / 51	53 / 51	53 / 51	53 / 51	53 / 51
Air flow	Indoor	Cooling (Hi/Me/Lo/Ulo)	m^3/min	20.5 / 18.6 / 16.2 / 10.4	20.5 / 18.6 / 16.2 / 10.4	24.5 / 21.3 / 17.6 / 10.4	24.5 / 21.3 / 17.6 / 10.4	24.5 / 21.3 / 17.6 / 10.4	24.5 / 21.3 / 17.6 / 10.4
		Heating (Hi/Me/Lo/Ulo)		25.0 / 19.8 / 17.3/ 13.3	25.0 / 19.8 / 17.3/ 13.3	27.5 / 23.2 / 19.1/ 13.6	27.5 / 23.2 / 19.1/ 13.6	27.5 / 23.2 / 19.1/ 13.6	27.5 / 23.2 / 19.1/ 13.6
	Outdoor	Cooling/Heating		60 / 50	60 / 50	100 / 100	100 / 100	100 / 100	100 / 100
Exterior dimensions	Indoor	HeightxWidthxDepth	mm	339 x 1197 x 262					
	Outdoor			750 x 880(+88) x 340		1300 x 970 x 370			
Net weight	Indoor		kg	15.5		16.5			
	Outdoor			60		97		99	
Ref.piping size	Liquid/Gas		ømm	9.52(3/8") / 15.88(5/8")					
Refrigerant line (one way) length			m	Max.50		Max.100			
Vertical height differences		Outdoor is higher/lower	m	Max.30 / Max.15		Max.50 / Max.15			
Outdoor operating temperature range		Cooling	°CDB	-15 to 50*2					
		Heating	°CWB	-20 to 20					
Air filter, Q'ty				Polypropylene net x 2(Washable)					
Remote control (option)				Wired:RC-EX3D, RC-E5, RC-ES1 & Interface kit:SC-BIKN2-E					

The values are for simultaneous Multi operation.

R32				Hyper Inverter		
Set model name				SRK100VNXWPZSX	SRK125VNXWPZSX	SRK140VNXWTZSX
				Twin		Triple
Indoor unit				SRK50ZSX-W x 2	SRK60ZSX-W x 2	SRK50ZSX-W x 3
Outdoor unit				FDC100VNX-W	FDC125VNX-W	FDC140VNX-W
Power source				1 Phase 220-240V, 50Hz / 220V, 60Hz		
Nominal cooling capacity (Min - Max)			kW	10.0 (3.5 - 11.2)	12.5 (3.5 - 14.0)	14.0 (3.5 - 16.0)
Nominal heating capacity (Min - Max)			kW	11.2 (2.7 - 12.5)	14.0 (2.7 - 17.0)	16.0 (2.7 - 18.0)
Power consumption		Cooling/Heating	kW	2.47 / 2.60	3.43 / 3.42	4.03 / 4.04
EER/COP		Cooling/Heating		4.05 / 4.31	3.64 / 4.09	3.48 / 3.96
Inrush current			A	5	5	5
Max. current				25	27	27
Sound power level*1	Indoor*3	Cooling/Heating	dB(A)	59 / 62	62 / 63	59 / 62
	Outdoor	Cooling/Heating		67 / 67	68 / 70	69 / 71
Sound pressure level*1	Indoor*3	Cooling (Hi/Me/Lo/Ulo)		44 / 39 / 31 / 22	46 / 41 / 33 / 22	44 / 39 / 31 / 22
		Heating (Hi/Me/Lo/Ulo)		46 / 41 / 33 / 23	46 / 42 / 34 / 23	46 / 41 / 33 / 23
	Outdoor	Cooling/Heating		53 / 51	53 / 54	54 / 54
Air flow	Indoor*3	Cooling (Hi/Me/Lo/Ulo)	m^3/min	14.3/ 12.4 / 7.8 / 5.4	16.3 / 13.4 / 8.9 / 5.4	14.3 / 12.4 / 7.8 / 5.4
		Heating (Hi/Me/Lo/Ulo)		17.3 / 14.3 / 9.8 / 6.2	17.8 / 13.7 / 10.9 / 6.2	17.3 / 14.3 / 9.8 / 6.2
	Outdoor	Cooling/Heating		100 / 100	100 / 100	100 / 100
Exterior dimensions	Indoor	HeightxWidthxDepth	mm	305 x 920 x 220		
	Outdoor			1300 x 970 x 370		
Net weight	Indoor		kg	13		
	Outdoor			97		
Ref.piping size	Liquid/Gas		ømm	9.52(3/8") / 15.88(5/8")		
Refrigerant line (one way) length			m	Max.100		Max.65
Vertical height differences		Outdoor is higher/lower	m	Max.50 / Max.15		
Outdoor operating temperature range		Cooling	°CDB	-15 to 50*2		
		Heating	°CWB	-20 to 20		
Air filter, Q'ty				Polypropylene net x 2(Washable)		
Remote control (option)				Wired:RC-EX3D, RC-E5, RC-ES1 & Interface kit:SC-BIKN2-E		

NOTES:

The data are measured under the following conditions (R32 : ISO-T1, -H1 / R410A : ISO-T1).
Cooling:Indoor temp. of 27°CDB, 19°CWB, and outdoor temp. of 35°CDB. Heating:Indoor temp. of 20°CDB, and outdoor temp. of 7°CDB, 6°CWB.
*1 : Indicates the value in an anechoic chamber. During operation these values are somewhat higher due to ambient conditions.
*2 : If a cooling operation is conducted when the outdoor air temperature is –5°C or lower, the outdoor unit should be installed at a place where it is not influenced by natural wind. If wind blows, the low pressure will drop and compressor frequency will increase, this will cause the capacity to drop and may cause the unit to break down.
*3 : The values are for one indoor unit operation. (Multi system only)

The values are for simultaneous Multi operation.

R32				Hyper Inverter		
Set model name				SRK100VSXWPZSX	SRK125VSXWPZSX	SRK140VSXWTZSX
				Twin		Triple
Indoor unit				SRK50ZSX-W x 2	SRK60ZSX-W x 2	SRK50ZSX-W x 3
Outdoor unit				FDC100VSX-W	FDC125VSX-W	FDC140VSX-W
Power source				3 Phase 380-415V, 50Hz / 380V, 60Hz		
Nominal cooling capacity (Min - Max)			kW	10.0 (3.5 - 11.2)	12.5 (3.5 - 14.0)	14.0 (3.5 - 16.0)
Nominal heating capacity (Min - Max)			kW	11.2 (2.7 - 12.5)	14.0 (2.7 - 18.0)	16.0 (2.7 - 20.0)
Power consumption		Cooling/Heating	kW	2.47 / 2.60	3.43 / 3.42	4.03 / 4.04
EER/COP		Cooling/Heating		4.05 / 4.31	3.64 / 4.09	3.48 / 3.96
Inrush current			A	5	5	5
Max. current				14	14	14
Sound power level*1	Indoor*3	Cooling/Heating	dB(A)	59 / 62	62 / 63	59 / 62
	Outdoor	Cooling/Heating		67 / 67	68 / 70	69 / 71
Sound pressure level*1	Indoor*3	Cooling (Hi/Me/Lo/Ulo)		44 / 39 / 31 / 22	46 / 41 / 33 / 22	44 / 39 / 31 / 22
		Heating (Hi/Me/Lo/Ulo)		46 / 41 / 33 / 23	46 / 42 / 34 / 23	46 / 41 / 33 / 23
	Outdoor	Cooling/Heating		53 / 51	53 / 54	54 / 54
Air flow	Indoor*3	Cooling (Hi/Me/Lo/Ulo)	m^3/min	14.3/ 12.4 / 7.8 / 5.4	16.3 / 13.4 / 8.9 / 5.4	14.3 / 12.4 / 7.8 / 5.4
		Heating (Hi/Me/Lo/Ulo)		17.3 / 14.3 / 9.8 / 6.2	17.8 / 13.7 / 10.9 / 6.2	17.3 / 14.3 / 9.8 / 6.2
	Outdoor	Cooling/Heating		100 / 100	100 / 100	100 / 100
Exterior dimensions	Indoor	HeightxWidthxDepth	mm	305 x 920 x 220		
	Outdoor			1300 x 970 x 370		
Net weight	Indoor		kg	13		
	Outdoor			99		
Ref.piping size	Liquid/Gas		ømm	9.52(3/8") / 15.88(5/8")		
Refrigerant line (one way) length			m	Max.100		Max.65
Vertical height differences		Outdoor is higher/lower	m	Max.50 / Max.15		
Outdoor operating temperature range		Cooling	°CDB	-15 to 50*2		
		Heating	°CWB	-20 to 20		
Air filter, Q'ty				Polypropylene net x 2(Washable)		
Remote control (option)				Wired:RC-EX3D, RC-E5, RC-ES1 & Interface kit:SC-BIKN2-E		

The values are for simultaneous Multi operation.

R410A				Hyper Inverter		
Set model name				SRK100VNXPZSX	SRK125VNXPZSX	SRK140VNXTZSX
				Twin		Triple
Indoor unit				SRK50ZSX-W x 2	SRK60ZSX-W x 2	SRK50ZSX-W x 3
Outdoor unit				FDC100VNX	FDC125VNX	FDC140VNX
Power source				1 Phase 220-240V, 50Hz / 220V, 60Hz		
Nominal cooling capacity (Min - Max)			kW	10.0 (4.0 - 11.2)	12.5 (5.0 - 14.0)	14.0 (5.0 - 16.0)
Nominal heating capacity (Min - Max)			kW	11.2 (4.0 - 12.5)	14.0 (4.0 - 17.0)	16.0 (4.0 - 18.0)
Power consumption		Cooling/Heating	kW	2.66 / 2.60	3.60 / 3.48	3.98 / 3.68
EER/COP		Cooling/Heating		3.76 / 4.31	3.47 / 4.02	3.52 / 4.35
Inrush current			A	5	5	5
Max. current				24	26	26
Sound power level*1	Indoor*3	Cooling/Heating	dB(A)	59 / 62	62 / 63	59 / 62
	Outdoor	Cooling/Heating		70 / 70	70 / 70	72 / 72
Sound pressure level*1	Indoor*3	Cooling (Hi/Me/Lo/Ulo)		44 / 39 / 31 / 22	46 / 41 / 33 / 22	44 / 39 / 31 / 22
		Heating (Hi/Me/Lo/Ulo)		46 / 41 / 33 / 23	46 / 42 / 34 / 23	46 / 41 / 33 / 23
	Outdoor	Cooling/Heating		48 / 50	48 / 50	49 / 52
Air flow	Indoor*3	Cooling (Hi/Me/Lo/Ulo)	m^3/min	14.3/ 12.4 / 7.8 / 5.4	16.3 / 13.4 / 8.9 / 5.4	14.3 / 12.4 / 7.8 / 5.4
		Heating (Hi/Me/Lo/Ulo)		17.3 / 14.3 / 9.8 / 6.2	17.8 / 13.7 / 10.9 / 6.2	17.3 / 14.3 / 9.8 / 6.2
	Outdoor	Cooling/Heating		100 / 100	100 / 100	100 / 100
Exterior dimensions	Indoor	HeightxWidthxDepth	mm	305 x 920 x 220		
	Outdoor			1300 x 970 x 370		
Net weight	Indoor		kg	13		
	Outdoor			105		
Ref.piping size	Liquid/Gas		ømm	9.52(3/8") / 15.88(5/8")		
Refrigerant line (one way) length			m	Max.100		
Vertical height differences		Outdoor is higher/lower	m	Max.30 / Max.15		
Outdoor operating temperature range		Cooling	°CDB	-15 to 43*2		
		Heating	°CWB	-20 to 20		
Air filter, Q'ty				Polypropylene net x 2(Washable)		
Remote control (option)				Wired:RC-EX3D, RC-E5, RC-ES1 & Interface kit:SC-BIKN2-E		

SPECIFICATIONS - SRK -

The values are for simultaneous Multi operation.

R410A				Hyper Inverter		
Set model name				SRK100VSXPZSX	SRK125VSXPZSX	SRK140VSXTZSX
				Twin		Triple
Indoor unit				SRK50ZSX-W x 2	SRK60ZSX-W x 2	SRK50ZSX-W x 3
Outdoor unit				FDC100VSX	FDC125VSX	FDC140VSX
Power source				3 Phase 380-415V, 50Hz / 380V, 60Hz		
Nominal cooling capacity (Min - Max)			kW	10.0 (4.0 - 11.2)	12.5 (5.0 - 14.0)	14.0 (5.0 - 16.0)
Nominal heating capacity (Min - Max)			kW	11.2 (4.0 - 16.0)	14.0 (4.0 - 18.0)	16.0 (4.0 - 20.0)
Power consumption		Cooling/Heating	kW	2.66 / 2.60	3.60 / 3.48	3.98 / 3.68
EER/COP		Cooling/Heating		3.76 / 4.31	3.47 / 4.02	3.52 / 4.35
Inrush current			A	5	5	5
Max. current				15	15	15
Sound power level*1	Indoor*3	Cooling/Heating	dB(A)	59 / 62	62 / 63	59 / 62
	Outdoor	Cooling/Heating		70 / 70	70 / 70	72 / 72
Sound pressure level*1	Indoor*3	Cooling (Hi/Me/Lo/Ulo)		44 / 39 / 31 / 22	46 / 41 / 33 / 22	44 / 39 / 31 / 22
		Heating (Hi/Me/Lo/Ulo)		46 / 41 / 33 / 23	46 / 42 / 34 / 23	46 / 41 / 33 / 23
	Outdoor	Cooling/Heating		48 / 50	48 / 50	49 / 52
Air flow	Indoor*3	Cooling (Hi/Me/Lo/Ulo)	m^3/min	14.3/ 12.4 / 7.8 / 5.4	16.3 / 13.4 / 8.9 / 5.4	14.3 / 12.4 / 7.8 / 5.4
		Heating (Hi/Me/Lo/Ulo)		17.3 / 14.3 / 9.8 / 6.2	17.8 / 13.7 / 10.9 / 6.2	17.3 / 14.3 / 9.8 / 6.2
	Outdoor	Cooling/Heating		100 / 100	100 / 100	100 / 100
Exterior dimensions	Indoor	HeightxWidthxDepth	mm	305 x 920 x 220		
	Outdoor			1300 x 970 x 370		
Net weight	Indoor		kg	13		
	Outdoor			105		
Ref.piping size	Liquid/Gas		ømm	9.52(3/8") / 15.88(5/8")		
Refrigerant line (one way) length			m	Max.100		
Vertical height differences		Outdoor is higher/lower	m	Max.30 / Max.15		
Outdoor operating temperature range		Cooling	°CDB	-15 to 43*2		
		Heating	°CWB	-20 to 20		
Air filter, Q'ty				Polypropylene net x 2(Washable)		
Remote control (option)				Wired:RC-EX3D, RC-E5, RC-ES1 & Interface kit:SC-BIKN2-E		

R32				Micro Inverter			
Set model name				SRK100VNAWZRF	SRK100VNAWZR	SRK100VSAWZRF	SRK100VSAWZR
Indoor unit				SRK100ZR-WF	SRK100ZR-W	SRK100ZR-WF	SRK100ZR-W
Outdoor unit				FDC100VNA-W	FDC100VNA-W	FDC100VSA-W	FDC100VSA-W
Power source				1 Phase 220-240V, 50Hz / 220V, 60Hz		3 Phase 380-415V, 50Hz / 380V, 60Hz	
Nominal cooling capacity (Min - Max)			kW	10.0 (4.0 - 11.2)	10.0 (4.0 - 11.2)	10.0 (4.0 - 11.2)	10.0 (4.0 - 11.2)
Nominal heating capacity (Min - Max)			kW	11.2 (4.0 - 12.5)	11.2 (4.0 - 12.5)	11.2 (4.0 - 12.5)	11.2 (4.0 - 12.5)
Power consumption		Cooling/Heating	kW	3.19 / 3.04	3.19 / 3.04	3.19 / 3.04	3.19 / 3.04
EER/COP		Cooling/Heating		3.13 / 3.68	3.13 / 3.68	3.13 / 3.68	3.13 / 3.68
Inrush current			A	5	5	5	5
Max. current				24	24	15	15
Sound power level*1	Indoor	Cooling/Heating	dB(A)	63 / 63	63 / 63	63 / 63	63 / 63
	Outdoor	Cooling/Heating		69 / 70	69 / 70	69 / 70	69 / 70
Sound pressure level*1	Indoor	Cooling (Hi/Me/Lo/Ulo)		48 / 45 / 40 / 27	48 / 45 / 40 / 27	48 / 45 / 40 / 27	48 / 45 / 40 / 27
		Heating (Hi/Me/Lo/Ulo)		48 / 43 / 38 / 30	48 / 43 / 38 / 30	48 / 43 / 38 / 30	48 / 43 / 38 / 30
	Outdoor	Cooling/Heating		54 / 55	54 / 55	54 / 55	54 / 55
Air flow	Indoor	Cooling (Hi/Me/Lo/Ulo)	m^3/min	24.5 / 21.3 / 17.6/ 10.4	24.5 / 21.3 / 17.6/ 10.4	24.5 / 21.3 / 17.6/ 10.4	24.5 / 21.3 / 17.6/ 10.4
		Heating (Hi/Me/Lo/Ulo)		27.5 / 23.2 / 19.1/ 13.6	27.5 / 23.2 / 19.1/ 13.6	27.5 / 23.2 / 19.1/ 13.6	27.5 / 23.2 / 19.1/ 13.6
	Outdoor	Cooling/Heating		75 / 73	75 / 73	75 / 73	75 / 73
Exterior dimensions	Indoor	HeightxWidthxDepth	mm	339 x 1197 x 262			
	Outdoor			845 x 970 x 370			
Net weight	Indoor		kg	16.5			
	Outdoor			77		78	
Ref.piping size	Liquid/Gas		ømm	9.52(3/8") / 15.88(5/8")			
Refrigerant line (one way) length			m	Max.50			
Vertical height differences		Outdoor is higher/lower	m	Max.50 / Max.15			
Outdoor operating temperature range		Cooling	°CDB	-15 to 50*2			
		Heating	°CWB	-20 to 20			
Air filter, Q'ty				Polypropylene net x2 (Washable)			
Remote control (option)				Wired:RC-EX3D, RC-E5, RC-ES1 & Interface kit:SC-BIKN2-E			

NOTES:

The data are measured under the following conditions (R32 : ISO-T1, -H1 / R410A : ISO-T1).
Cooling:Indoor temp. of 27°CDB, 19°CWB, and outdoor temp. of 35°CDB. Heating:Indoor temp. of 20°CDB, and outdoor temp. of 7°CDB, 6°CWB.
*1 : Indicates the value in an anechoic chamber. During operation these values are somewhat higher due to ambient conditions.
*2 : If a cooling operation is conducted when the outdoor air temperature is –5°C or lower, the outdoor unit should be installed at a place where it is not influenced by natural wind. If wind blows, the low pressure will drop and compressor frequency will increase, this will cause the capacity to drop and may cause the unit to break down.
*3 : The values are for one indoor unit operation. (Multi system only)

The values are for simultaneous Multi operation.

R32				Micro Inverter			
Set model name				SRK100VNAWPZSX	SRK125VNAWPZSX	SRK140VNAWPZR	SRK140VNAWTZSX
					Twin		Triple
Indoor unit				SRK50ZSX-W x 2	SRK60ZSX-W x 2	SRK71ZR-W x 2	SRK50ZSX-W x 3
Outdoor unit				FDC100VNA-W	FDC125VNA-W	FDC140VNA-W	FDC140VNA-W
Power source				1 Phase 220-240V, 50Hz / 220V, 60Hz			
Nominal cooling capacity (Min - Max)			kW	10.0 (4.0 - 11.2)	12.5 (5.0 - 14.0)	13.6 (5.0 - 14.5)	13.6 (5.0 - 14.5)
Nominal heating capacity (Min - Max)			kW	11.2 (4.0 - 12.5)	14.0 (4.0 - 16.0)	15.5 (4.0 - 16.5)	15.5 (4.0 - 16.5)
Power consumption		Cooling/Heating	kW	2.89 / 2.61	4.54 / 3.58	4.26 / 4.03	4.26 / 3.74
EER/COP		Cooling/Heating		3.46 / 4.29	2.76 / 3.91	3.19 / 3.85	3.19 / 4.14
Inrush current			A	5	5	5	5
Max. current				24	24	24	24
Sound power level*1	Indoor*3	Cooling/Heating	dB(A)	59 / 62	62 / 63	57 / 60	59 / 62
	Outdoor	Cooling/Heating		69 / 70	71 / 71	72 / 73	72 / 73
Sound pressure level*1	Indoor*3	Cooling (Hi/Me/Lo/Ulo)		44 / 39 / 31 / 22	46 / 41 / 33 / 22	44 / 41 / 37 / 25	44 / 39 / 31 / 22
		Heating (Hi/Me/Lo/Ulo)		46 / 41 / 33 / 23	46 / 42 / 34 / 23	46 / 39 / 35 / 28	46 / 41 / 33 / 23
	Outdoor	Cooling/Heating		54 / 55	54 / 56	56 / 58	56 / 58
Air flow	Indoor*3	Cooling (Hi/Me/Lo/Ulo)	m^3/min	14.3/ 12.4 / 7.8 / 5.4	16.3 / 13.4 / 8.9 / 5.4	20.5 / 18.6 / 16.2 / 10.4	14.3 / 12.4 / 7.8 / 5.4
		Heating (Hi/Me/Lo/Ulo)		17.3 / 14.3 / 9.8 / 6.2	17.8 / 13.7 / 10.9 / 6.2	25.0 / 19.8 / 17.3 / 13.3	17.3 / 14.3 / 9.8 / 6.2
	Outdoor	Cooling/Heating		75 / 73	75 / 73	75 / 73	75 / 73
Exterior dimensions	Indoor	HeightxWidthxDepth	mm	305 x 920 x 220		339 x 1197 x 262	305 x 920 x 220
	Outdoor			845 x 970 x 370			
Net weight	Indoor		kg	13		15.5	13
	Outdoor			77			
Ref.piping size	Liquid/Gas		ømm	9.52(3/8") / 15.88(5/8")			
Refrigerant line (one way) length			m	Max.50			
Vertical height differences		Outdoor is higher/lower	m	Max.50 / Max.15			
Outdoor operating temperature range		Cooling	°CDB	-15 to 50*2			
		Heating	°CWB	-20 to 20			
Air filter, Q'ty				Polypropylene net x 2(Washable)			
Remote control (option)				Wired:RC-EX3D, RC-E5, RC-ES1 & Interface kit:SC-BIKN2-E			

The values are for simultaneous Multi operation.

R32				Micro Inverter			
Set model name				SRK100VSAWPZSX	SRK125VSAWPZSX	SRK140VSAWPZR	SRK140VSAWTZSX
					Twin		Triple
Indoor unit				SRK50ZSX-W x 2	SRK60ZSX-W x 2	SRK71ZR-W x 2	SRK50ZSX-W x 3
Outdoor unit				FDC100VSA-W	FDC125VSA-W	FDC140VSA-W	FDC140VSA-W
Power source				3 Phase 380-415V, 50Hz / 380V, 60Hz			
Nominal cooling capacity (Min - Max)			kW	10.0 (4.0 - 11.2)	12.5 (5.0 - 14.0)	13.6 (5.0 - 14.5)	13.6 (5.0 - 14.5)
Nominal heating capacity (Min - Max)			kW	11.2 (4.0 - 12.5)	14.0 (4.0 - 16.0)	15.5 (4.0 - 16.5)	15.5 (4.0 - 16.5)
Power consumption		Cooling/Heating	kW	2.89 / 2.61	4.54 / 3.58	4.26 / 4.03	4.26 / 3.74
EER/COP		Cooling/Heating		3.46 / 4.29	2.76 / 3.91	3.19 / 3.85	3.19 / 4.14
Inrush current			A	5	5	5	5
Max. current				15	15	15	15
Sound power level*1	Indoor*3	Cooling/Heating	dB(A)	59 / 62	62 / 63	57 / 60	59 / 62
	Outdoor	Cooling/Heating		69 / 70	71 / 71	72 / 73	72 / 73
Sound pressure level*1	Indoor*3	Cooling (Hi/Me/Lo/Ulo)		44 / 39 / 31 / 22	46 / 41 / 33 / 22	44 / 41 / 37 / 25	44 / 39 / 31 / 22
		Heating (Hi/Me/Lo/Ulo)		46 / 41 / 33 / 23	46 / 42 / 34 / 23	46 / 39 / 35 / 28	46 / 41 / 33 / 23
	Outdoor	Cooling/Heating		54 / 55	54 / 56	56 / 58	56 / 58
Air flow	Indoor*3	Cooling (Hi/Me/Lo/Ulo)	m^3/min	14.3/ 12.4 / 7.8 / 5.4	16.3 / 13.4 / 8.9 / 5.4	20.5 / 18.6 / 16.2 / 10.4	14.3 / 12.4 / 7.8 / 5.4
		Heating (Hi/Me/Lo/Ulo)		17.3 / 14.3 / 9.8 / 6.2	17.8 / 13.7 / 10.9 / 6.2	25.0 / 19.8 / 17.3 / 13.3	17.3 / 14.3 / 9.8 / 6.2
	Outdoor	Cooling/Heating		75 / 73	75 / 73	75 / 73	75 / 73
Exterior dimensions	Indoor	HeightxWidthxDepth	mm	305 x 920 x 220		339 x 1197 x 262	305 x 920 x 220
	Outdoor			845 x 970 x 370			
Net weight	Indoor		kg	13		15.5	13
	Outdoor			78			
Ref.piping size	Liquid/Gas		ømm	9.52(3/8") / 15.88(5/8")			
Refrigerant line (one way) length			m	Max.50			
Vertical height differences		Outdoor is higher/lower	m	Max.50 / Max.15			
Outdoor operating temperature range		Cooling	°CDB	-15 to 50*2			
		Heating	°CWB	-20 to 20			
Air filter, Q'ty				Polypropylene net x 2(Washable)			
Remote control (option)				Wired:RC-EX3D, RC-E5, RC-ES1 & Interface kit:SC-BIKN2-E			

SPECIFICATIONS - SRK -

The values are for simultaneous Multi operation.

R32				Micro Inverter	
Set model name				SRK200VSAWPZRF	SRK200VSAWPZR
				Twin	
Indoor unit				SRK100ZR-WF x 2	SRK100ZR-W x 2
Outdoor unit				FDC200VSA-W	FDC200VSA-W
Power source				3 Phase 380-415V, 50Hz / 380V, 60Hz	
Nominal cooling capacity (Min - Max)			kW	20.0 (7.0 - 22.4)	20.0 (7.0 - 22.4)
Nominal heating capacity (Min - Max)			kW	22.4 (6.6 - 25.0)	22.4 (6.6 - 25.0)
Power consumption		Cooling/Heating	kW	7.46 / 6.87	7.46 / 6.87
EER/COP		Cooling/Heating		2.68 / 3.26	2.68 / 3.26
Inrush current			A	5	5
Max. current				19	19
Sound power level*1	Indoor	Cooling/Heating	dB(A)	63 / 63	63 / 63
	Outdoor	Cooling/Heating		72 / 74	72 / 74
Sound pressure level*1	Indoor	Cooling (Hi/Me/Lo/Ulo)		48 / 45 / 40 / 27	48 / 45 / 40 / 27
		Heating (Hi/Me/Lo/Ulo)		48 / 43 / 38 / 30	48 / 43 / 38 / 30
	Outdoor	Cooling/Heating		58 / 59	58 / 59
Air flow	Indoor	Cooling (Hi/Me/Lo/Ulo)	m^3/min	24.5 / 21.3 / 17.6 / 10.4	24.5 / 21.3 / 17.6 / 10.4
		Heating (Hi/Me/Lo/Ulo)		27.5 / 23.2 / 19.1 / 13.6	27.5 / 23.2 / 19.1 / 13.6
	Outdoor	Cooling/Heating		148 / 134	148 / 134
Exterior dimensions	Indoor	HeightxWidthxDepth	mm	339 x 1197 x 262	
	Outdoor			1505 x 970 x 370	
Net weight	Indoor		kg	16.5	
	Outdoor			144	
Ref.piping size	Liquid/Gas		ømm	9.52(3/8") / 22.22(7/8")	
Refrigerant line (one way) length			m	Max.70	
Vertical height differences		Outdoor is higher/lower	m	Max.50*4 / Max.15	
Outdoor operating temperature range		Cooling	°CDB	-15 to 50*2	
		Heating	°CWB	-20 to 20	
Air filter, Q'ty				Polypropylene net x2 (Washable)	
Remote control (option)				Wired:RC-EX3D, RC-E5, RC-ES1 & Interface kit:SC-BIKN2-E	

The values are for simultaneous Multi operation.

R410A				Micro Inverter		
Set model name				SRK100VNAZR	SRK100VSAZR	SRK200VSAPZR
				-		Twin
Indoor unit				SRK100ZR-W	SRK100ZR-W	SRK100ZR-W x 2
Outdoor unit				FDC100VNA	FDC100VSA	FDC200VSA
Power source				1 Phase 220-240V, 50Hz / 220V, 60Hz	3 Phase 380-415V, 50Hz / 380V, 60Hz	
Nominal cooling capacity (Min - Max)			kW	10.0 (4.0 - 11.2)	10.0 (4.0 - 11.2)	19.0 (5.2 - 22.4)
Nominal heating capacity (Min - Max)			kW	11.2 (4.0 - 12.5)	11.2 (4.0 - 12.5)	22.4 (3.3 - 25.0)
Power consumption		Cooling/Heating	kW	3.19 / 2.78	3.19 / 2.78	7.52 / 7.41
EER/COP		Cooling/Heating		3.13 / 4.03	3.13 / 4.03	2.53 / 3.02
Inrush current			A	5	5	5
Max. current				24	15	20
Sound power level*1	Indoor*3	Cooling/Heating	dB(A)	63 / 63	63 / 63	63 / 63
	Outdoor	Cooling/Heating		70 / 70	70 / 70	72 / 74
Sound pressure level*1	Indoor*3	Cooling (Hi/Me/Lo/Ulo)		48 / 45 / 40 / 27	48 / 45 / 40 / 27	48 / 45 / 40 / 27
		Heating (Hi/Me/Lo/Ulo)		48 / 43 / 38 / 30	48 / 43 / 38 / 30	48 / 43 / 38 / 30
	Outdoor	Cooling/Heating		54 / 56	54 / 56	58 / 59
Air flow	Indoor*3	Cooling (Hi/Me/Lo/Ulo)	m^3/min	24.5 / 21.3 / 17.6/ 10.4	24.5 / 21.3 / 17.6/ 10.4	24.5 / 21.3 / 17.6 / 10.4
		Heating (Hi/Me/Lo/Ulo)		27.5 / 23.2 / 19.1/ 13.6	27.5 / 23.2 / 19.1/ 13.6	27.5 / 23.2 / 19.1 / 13.6
	Outdoor	Cooling/Heating		75 / 73	75 / 73	135 / 135
Exterior dimensions	Indoor	HeightxWidthxDepth	mm	339 x 1197 x 262		
	Outdoor			845 x 970 x 370		1300 x 970 x 370
Net weight	Indoor		kg	16.5		
	Outdoor			80	82	115
Ref.piping size	Liquid/Gas		ømm	9.52(3/8") / 15.88(5/8")		9.52(3/8") / 22.22(7/8")
Refrigerant line (one way) length			m	Max.50		Max.70
Vertical height differences		Outdoor is higher/lower	m	Max.50 / Max.15		Max.30 / Max.15
Outdoor operating temperature range		Cooling	°CDB	-15 to 50*2		
		Heating	°CWB	-20 to 20		-15 to 20
Air filter, Q'ty				Polypropylene net x2 (Washable)		
Remote control (option)				Wired:RC-EX3D, RC-E5, RC-ES1 & Interface kit:SC-BIKN2-E		

NOTES:

The data are measured under the following conditions (R32 : ISO-T1, -H1 / R410A : ISO-T1).
Cooling:Indoor temp. of 27°CDB, 19°CWB, and outdoor temp. of 35°CDB. Heating:Indoor temp. of 20°CDB, and outdoor temp. of 7°CDB, 6°CWB.
*1 : Indicates the value in an anechoic chamber. During operation these values are somewhat higher due to ambient conditions.
*2 : If a cooling operation is conducted when the outdoor air temperature is –5°C or lower, the outdoor unit should be installed at a place where it is not influenced by natural wind. If wind blows, the low pressure will drop and compressor frequency will increase, this will cause the capacity to drop and may cause the unit to break down.
*3 : The values are for one indoor unit operation. (Multi system only)
*4 : In case of following conditions:Max.50m(Outdoor unit is higher & Outdoor temperature ≦ 43°C), Max.30m(Outdoor unit is higher & Outdoor temperature > 43°C)

R32				Standard Inverter			
Set model name				SRK71VNPWZRF	SRK71VNPWZR	SRK100VNPWZRF	SRK100VNPWZR
Indoor unit				SRK71ZR-WF	SRK71ZR-W	SRK100ZR-WF	SRK100ZR-W
Outdoor unit				FDC71VNP-W	FDC71VNP-W	FDC100VNP-W	FDC100VNP-W
Power source				1 Phase 220-240V, 50Hz / 220V, 60Hz			
Nominal cooling capacity (Min - Max)			kW	7.1 (1.5 - 7.3)	7.1 (1.5 - 7.3)	9.6 (2.1 - 9.6)	9.6 (2.1 - 9.6)
Nominal heating capacity (Min - Max)			kW	7.1 (1.1 - 7.3)	7.1 (1.1 - 7.3)	10.0 (1.7 - 10.4)	10.0 (1.7 - 10.4)
Power consumption		Cooling/Heating	kW	2.36 / 1.88	2.36 / 1.88	3.10 / 2.80	3.10 / 2.80
EER/COP		Cooling/Heating		3.01 / 3.78	3.01 / 3.78	3.10 / 3.57	3.10 / 3.57
Inrush current			A	5	5	5	5
Max. current				15.8	15.8	19	19
Sound power level*1	Indoor*3	Cooling/Heating	dB(A)	57 / 60	57 / 60	63 / 63	63 / 63
	Outdoor	Cooling/Heating		67 / 67	67 / 67	68 / 67	68 / 67
Sound pressure level*1	Indoor*3	Cooling (Hi/Me/Lo/Ulo)		44 / 41 / 37 / 25	44 / 41 / 37 / 25	48 / 45 / 40 / 27	48 / 45 / 40 / 27
		Heating (Hi/Me/Lo/Ulo)		46 / 39 / 35 / 28	46 / 39 / 35 / 28	48 / 43 / 38 / 30	48 / 43 / 38 / 30
	Outdoor	Cooling/Heating		54 / 54	54 / 54	56 / 54	56 / 54
Air flow	Indoor*3	Cooling (Hi/Me/Lo/Ulo)	m^3/min	20.5 / 18.6 / 16.2 / 10.4	20.5 / 18.6 / 16.2 / 10.4	24.5 / 21.3 / 17.6 / 10.4	24.5 / 21.3 / 17.6 / 10.4
		Heating (Hi/Me/Lo/Ulo)		25.0 / 19.8 / 17.3 / 13.3	25.0 / 19.8 / 17.3 / 13.3	27.5 / 23.2 / 19.1 / 13.6	27.5 / 23.2 / 19.1 / 13.6
	Outdoor	Cooling/Heating		42 / 42	42 / 42	63 / 55	63 / 55
Exterior dimensions	Indoor	HeightxWidthxDepth	mm	339 x 1197 x 262			
	Outdoor			640 x 800(+71) x 290		750 x 880(+88) x 340	
Net weight	Indoor		kg	15.5		16.5	
	Outdoor			45		57	
Ref.piping size	Liquid/Gas		ømm	6.35(1/4") / 12.7(1/2")		6.35(1/4") / 15.88(5/28")	
Refrigerant line (one way) length			m	Max.30			
Vertical height differences		Outdoor is higher/lower	m	Max.20 / Max.20			
Outdoor operating temperature range		Cooling	°CDB	-15 to 46*2			
		Heating	°CWB	-15 to 20			
Air filter, Q'ty				Polypropylene net x2 (Washable)			
Remote control (option)				Wired:RC-EX3D, RC-E5, RC-ES1 & Interface kit:SC-BIKN2-E			

FDE

Intdoor Unit
Ceiling Suspended

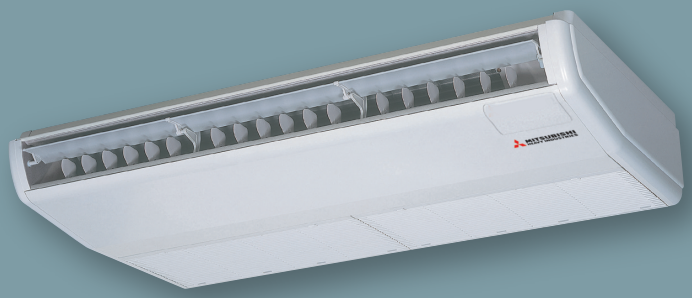

FDE 40/50/60/71/100/125/140



Energy Saving
Home Leave
Hi Power
Silent Operation
Flap Control
Favourite Setting

R410A
R32
Hybrid

Remote control (Option)

Wired



RC-EX3D



RC-E5

New!



RC-ES1

Wireless



RCN-E-E3

*Not all functions available with all remote control options.

High Efficiency

Energy efficiency was improved by use of DC fan motor & high efficient heat exchanger.

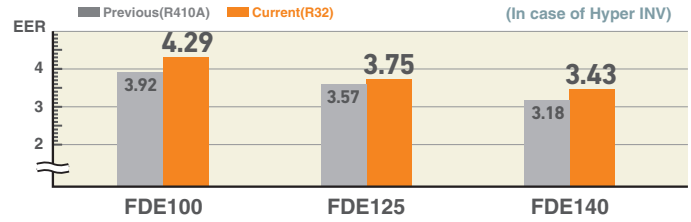

Lighter than ever

By decreasing the numbers of fan motors from two to one, we reduced the overall weight of our FDE units.

	Previous(VF)	Current(VH)	
60·71VH	37	33	4kg less!!
100·125·140VH	49	43	6kg less!!

Reduced Noise

The industry's lowest sound pressure levels were achieved by decreasing air flow volume, decreasing pressure loss with employment of one fan motor and optimizing casing and distributor shape.

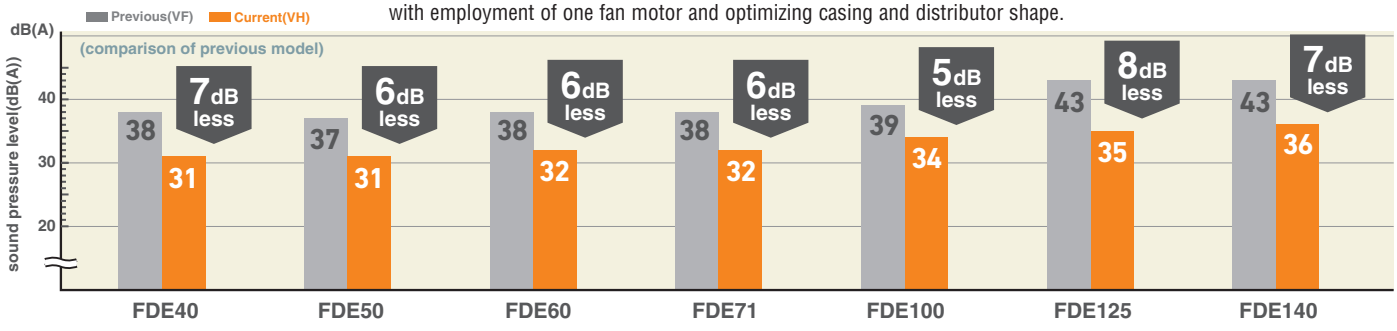

Flap Control System

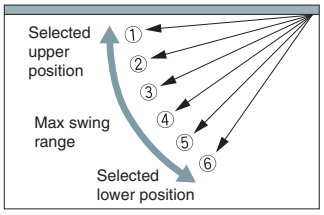

The flap can swing within the range of upper and lower flap position selected.

* The wireless remote control is not applicable to the flap control system.

Motion Sensor (Option)

Motion sensor is equipped in the panel and detects the presence/absence and activity of humans in a room to improve the comfort and energy saving performance of the unit.



LB-E

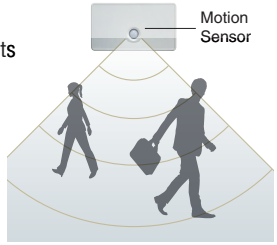

Improved Installation Workability

The refrigerant pipe from the unit can be arranged in three directions, rear, right and up. The drain pipe can be arranged in two directions, left and right. This will allow a free layout of piping for various installation conditions. The unit can only be serviced from the bottom.

Increased freedom of a piping layout



OUTDOOR UNIT

		Hyper Inverter		
SRC • FDC		40ZSX-W1,50•60ZSX-W3	71VNX-W	100-140VN(S)X-W
		–	–	100-140VN(S)X
model				
Chargeless		15m	30m	
Height x Width x Depth (mm)		640 x 800(+71) x 290	750 x 880(+88) x 340	1300 x 970 x 370

		Micro Inverter			Standard Inverter		
FDC		100-140VN(S)A-W	–	200•250•280VSA-W	71VNP-W	90•100VNP-W	125VNP-W
		100-140VN(S)A	200VSA	250VSA	–	–	–
model							
Chargeless		30m			15m		
Height x Width x Depth (mm)		845 x 970 x 370	1300 x 970 x 370	1505 x 970 x 370	640 x 800(+71) x 290	750 x 880(+88) x 340	845 x 970 x 370

DIMENSIONS (Unit:mm) - FDE -

Models FDE40VH, 50VH

Symbol	Content	
A	Gas piping	ϕ12.7 (1/2") (Flare)
B	Liquid piping	ϕ6.35 (1/4") (Flare)
C 1,2	Drain piping	VP20 (I.D.20, O.D.26)
D	Hole for suspension bolts	(M10 or M8)
E	Back cutout	PE cover
F	Top cutout	Plate cover
G	Drain piping (for left back)	(Knock out)

Note (1) The model name label is attached on the fan casing inside the air return grille.

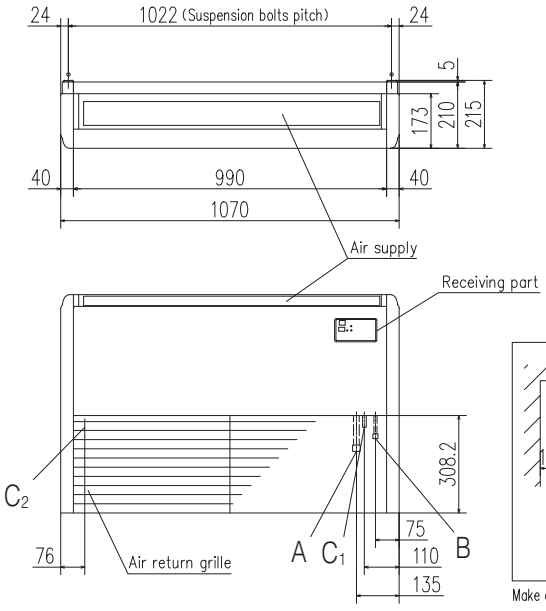

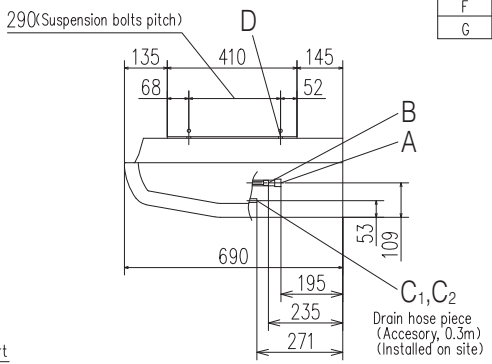

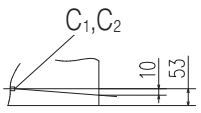

Note) The slope of drain piping inside the unit must take decline of 10mm.

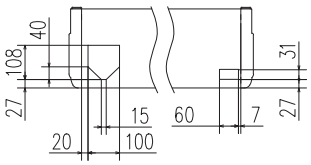

Space for installation and service

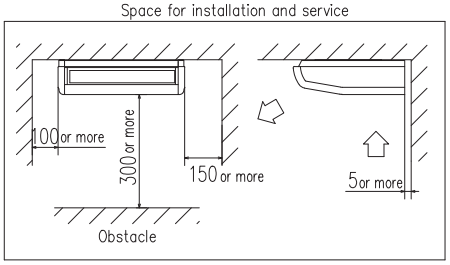

Make a space of 4000 or more between the units when installing more than one.

Position of top cutout and back cutout

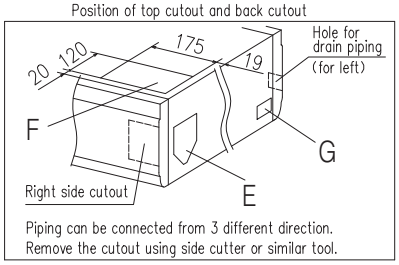

Piping can be connected from 3 different direction.
Remove the cutout using side cutter or similar tool.

DIMENSIONS (Unit:mm) - FDE -

Models FDE60VH, 71VH

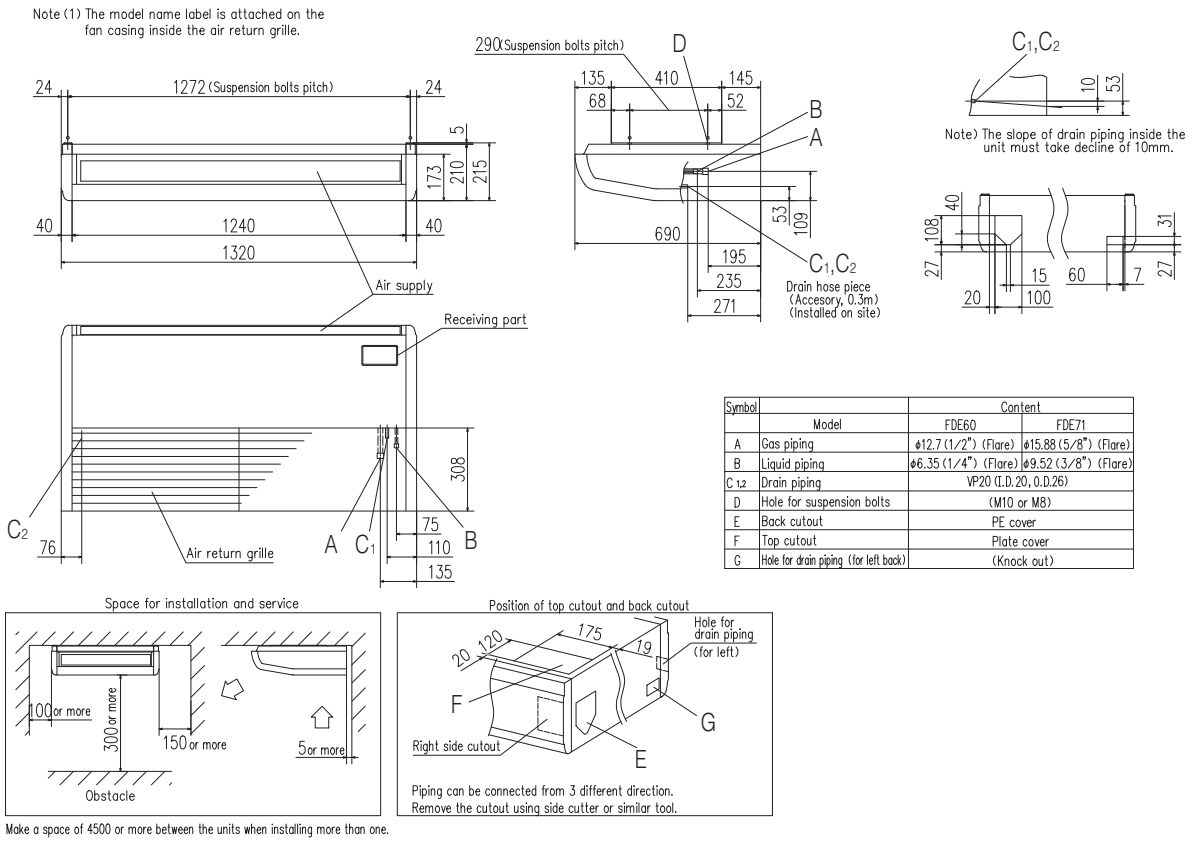

Symbol		Content	
	Model	FDE60	FDE71
A	Gas piping	ϕ12.7 (1/2") (Flare)	ϕ15.88 (5/8") (Flare)
B	Liquid piping	ϕ6.35 (1/4") (Flare)	ϕ9.52 (3/8") (Flare)
C 1,2	Drain piping	VP20 (I.D.20, O.D.26)	
D	Hole for suspension bolts	(M10 or M8)	
E	Back cutout	PE cover	
F	Top cutout	Plate cover	
G	Hole for drain piping (for left back)	(Knock out)	

Make a space of 4500 or more between the units when installing more than one.

Models FDE100VH, 125VH, 140VH

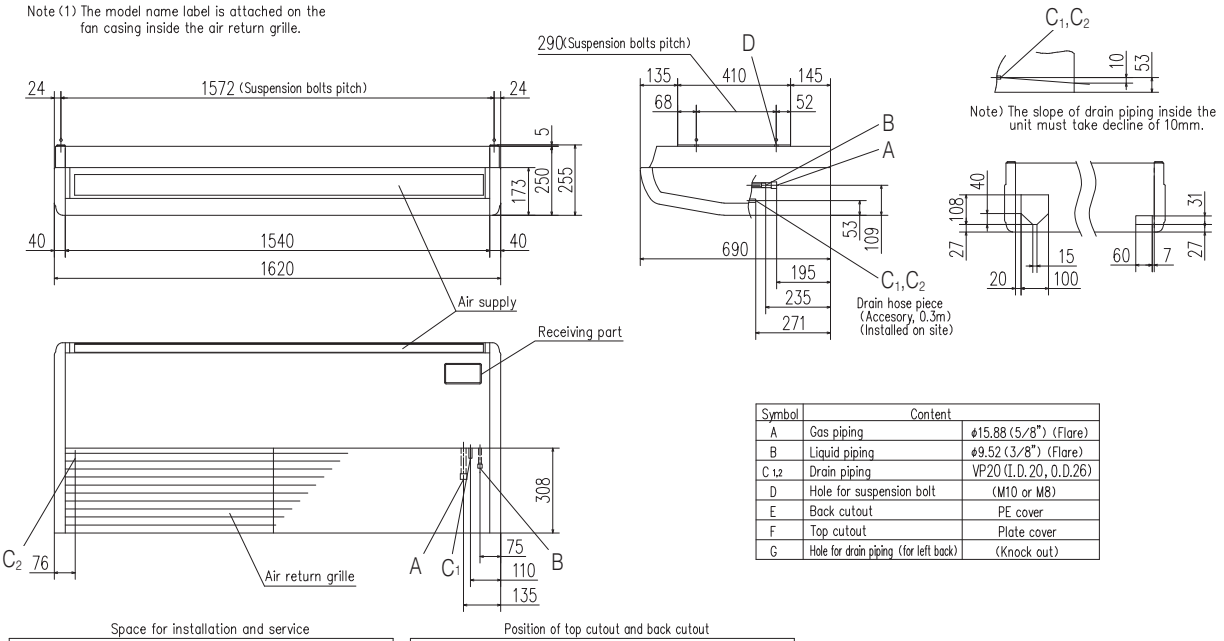

Symbol	Content	
A	Gas piping	ϕ15.88 (5/8") (Flare)
B	Liquid piping	ϕ9.52 (3/8") (Flare)
C 1,2	Drain piping	VP20 (I.D.20, O.D.26)
D	Hole for suspension bolt	(M10 or M8)
E	Back cutout	PE cover
F	Top cutout	Plate cover
G	Hole for drain piping (for left back)	(Knock out)

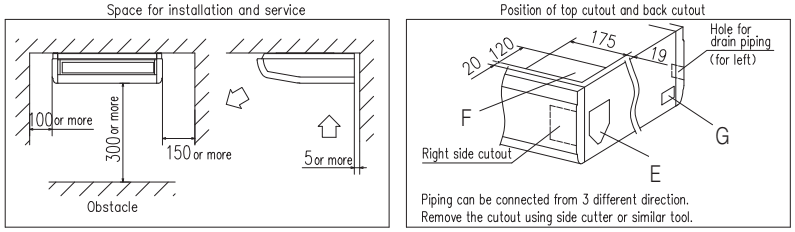

Make a space of 5000 or more between the units when installing more than one.

SPECIFICATIONS - FDE -

R32				Hyper Inverter		
Set model name				FDE40ZSXW1VH	FDE50ZSXW3VH	FDE60ZSXW3VH
Indoor unit				FDE40VH	FDE50VH	FDE60VH
Outdoor unit				SRC40ZSX-W1	SRC50ZSX-W3	SRC60ZSX-W3
Power source				1 Phase 220-240V, 50Hz / 220V, 60Hz		
Nominal cooling capacity (Min - Max)			kW	4.0 (1.1 - 4.7)	5.0 (1.1 - 5.6)	5.6 (1.1 - 6.3)
Nominal heating capacity (Min - Max)			kW	4.5 (0.6 - 5.4)	5.4 (0.6 - 6.3)	6.7 (0.6 - 7.1)
Power consumption		Cooling/Heating	kW	1.02 / 1.10	1.43 / 1.46	1.51 / 1.86
EER/COP		Cooling/Heating		3.92 / 4.09	3.49 / 3.70	3.71 / 3.60
Inrush current			A	5	5	5
Max. current				15	15	15
Sound power level*1	Indoor	Cooling/Heating	dB(A)	60 / 60	60 / 60	60 / 60
	Outdoor	Cooling/Heating		63 / 62	63 / 62	65 / 65
Sound pressure level*1	Indoor	Cooling (P-Hi/Hi/Me/Lo)		46 / 38 / 36 / 31	46 / 38 / 36 / 31	47 / 41 / 37 / 32
		Heating (P-Hi/Hi/Me/Lo)		46 / 38 / 36 / 31	46 / 38 / 36 / 31	47 / 41 / 37 / 32
	Outdoor	Cooling/Heating		52 / 50	52 / 50	53 / 54
Air flow	Indoor	Cooling (P-Hi/Hi/Me/Lo)	m^3/min	13 / 10 / 9 / 7	13 / 10 / 9 / 7	20 / 16 / 13 / 10
		Heating (P-Hi/Hi/Me/Lo)		13 / 10 / 9 / 7	13 / 10 / 9 / 7	20 / 16 / 13 / 10
	Outdoor	Cooling/Heating		33 / 33	39 / 33	41.5 / 39
Exterior dimensions	Indoor	HeightxWidthxDepth	mm	210 x 1070 x 690		210 x 1320 x 690
	Outdoor			640 x 800(+71) x 290		
Net weight	Indoor		kg	28		33
	Outdoor			45		
Ref.piping size	Liquid/Gas		ømm	6.35(1/4") / 12.7(1/2")		
Refrigerant line (one way) length			m	Max.30		
Vertical height differences		Outdoor is higher/lower	m	Max.20 / Max.20		
Outdoor operating temperature range		Cooling	°CDB	-15 to 46*2		
		Heating	°CWB	-20 to 20		
Air filter, Q'ty				Pocket Plastic net x2(Washable)		
Remote control (option)				Wired:RC-EX3D, RC-E5, RC-ES1 Wireless:RCN-E-E3		

R32				Hyper Inverter			
Set model name				FDE71VNXWVH	FDE100VNXWVH	FDE125VNXWVH	FDE140VNXWVH
Indoor unit				FDE71VH	FDE100VH	FDE125VH	FDE140VH
Outdoor unit				FDC71VNX-W	FDC100VNX-W	FDC125VNX-W	FDC140VNX-W
Power source				1 Phase 220-240V, 50Hz / 220V, 60Hz			
Nominal cooling capacity (Min - Max)			kW	7.1 (3.2 - 8.0)	10.0 (3.5 - 11.2)	12.5 (3.5 - 14.0)	14.0 (3.5 - 16.0)
Nominal heating capacity (Min - Max)			kW	8.0 (3.6 - 9.0)	11.2 (2.7 - 12.5)	14.0 (2.7 - 17.0)	16.0 (2.7 - 18.0)
Power consumption		Cooling/Heating	kW	1.87 / 1.87	2.33 / 2.52	3.34 / 3.74	4.08 / 4.41
EER/COP		Cooling/Heating		3.80 / 4.28	4.29 / 4.45	3.75 / 3.74	3.43 / 3.63
Inrush current			A	5	5	5	5
Max. current				19.1	25	27	27
Sound power level*1	Indoor	Cooling/Heating	dB(A)	60 / 60	64 / 64	64 / 64	65 / 65
	Outdoor	Cooling/Heating		66 / 66	67 / 67	68 / 70	69 / 71
Sound pressure level*1	Indoor	Cooling (P-Hi/Hi/Me/Lo)		47 / 41 / 37 / 32	48 / 43 / 38 / 34	48 / 45 / 40 / 35	49 / 45 / 40 / 36
		Heating (P-Hi/Hi/Me/Lo)		47 / 41 / 37 / 32	48 / 43 / 38 / 34	48 / 45 / 40 / 35	49 / 45 / 40 / 36
	Outdoor	Cooling/Heating		51 / 51	53 / 51	53 / 54	54 / 54
Air flow	Indoor	Cooling (P-Hi/Hi/Me/Lo)	m^3/min	20 / 16 / 13 / 10	32 / 26 / 21 / 16.5	32 / 29 / 23 / 17	34 / 29 / 23 / 18
		Heating (P-Hi/Hi/Me/Lo)		20 / 16 / 13 / 10	32 / 26 / 21 / 16.5	32 / 29 / 23 / 17	34 / 29 / 23 / 18
	Outdoor	Cooling/Heating		60 / 50	100 / 100	100 / 100	100 / 100
Exterior dimensions	Indoor	HeightxWidthxDepth	mm	210 x 1320 x 690	250 x 1620 x 690		
	Outdoor			750 x 880(+88) x 340	1300 x 970 x 370		
Net weight	Indoor		kg	33	43		
	Outdoor			60	97		
Ref.piping size	Liquid/Gas		ømm	9.52(3/8") / 15.88(5/8")			
Refrigerant line (one way) length			m	Max.50	Max.100		
Vertical height differences		Outdoor is higher/lower	m	Max.30 / Max.15	Max.50 / Max.15		
Outdoor operating temperature range		Cooling	°CDB	-15 to 50*2			
		Heating	°CWB	-20 to 20			
Air filter, Q'ty				Pocket Plastic net x2(Washable)			
Remote control (option)				Wired:RC-EX3D, RC-E5, RC-ES1 Wireless:RCN-E-E3			

NOTES:

The data are measured under the following conditions(ISO-T1, -H1).
Cooling:Indoor temp. of 27°CDB, 19°CWB, and outdoor temp. of 35°CDB. Heating:Indoor temp. of 20°CDB, and outdoor temp. of 7°CDB, 6°CWB.
*1 : Indicates the value in an anechoic chamber. During operation these values are somewhat higher due to ambient conditions.
*2 : If a cooling operation is conducted when the outdoor air temperature is –5°C or lower, the outdoor unit should be installed at a place where it is not influenced by natural wind. If wind blows, the low pressure will drop and compressor frequency will increase, this will cause the capacity to drop and may cause the unit to break down.

SPECIFICATIONS - FDE -

R32				Hyper Inverter		
Set model name				FDE100VSXWVH	FDE125VSXWVH	FDE140VSXWVH
Indoor unit				FDE100VH	FDE125VH	FDE140VH
Outdoor unit				FDC100VSX-W	FDC125VSX-W	FDC140VSX-W
Power source				3 Phase 380-415V, 50Hz / 380V, 60Hz		
Nominal cooling capacity (Min - Max)			kW	10.0 (3.5 - 11.2)	12.5 (3.5 - 14.0)	14.0 (3.5 - 16.0)
Nominal heating capacity (Min - Max)			kW	11.2 (2.7 - 16.0)	14.0 (2.7 - 18.0)	16.0 (2.7 - 20.0)
Power consumption		Cooling/Heating	kW	2.33 / 2.52	3.34 / 3.74	4.08 / 4.41
EER/COP		Cooling/Heating		4.29 / 4.45	3.75 / 3.74	3.43 / 3.63
Inrush current			A	5	5	5
Max. current				14	14	14
Sound power level*1	Indoor	Cooling/Heating	dB(A)	64 / 64	64 / 64	65 / 65
	Outdoor	Cooling/Heating		67 / 67	68 / 70	69 / 71
Sound pressure level*1	Indoor	Cooling (P-Hi/Hi/Me/Lo)		48 / 43 / 38 / 34	48 / 45 / 40 / 35	49 / 45 / 40 / 36
		Heating (P-Hi/Hi/Me/Lo)		48 / 43 / 38 / 34	48 / 45 / 40 / 35	49 / 45 / 40 / 36
	Outdoor	Cooling/Heating		53 / 51	53 / 54	54 / 54
Air flow	Indoor	Cooling (P-Hi/Hi/Me/Lo)	m^3/min	32 / 26 / 21 / 16.5	32 / 29 / 23 / 17	34 / 29 / 23 / 18
		Heating (P-Hi/Hi/Me/Lo)		32 / 26 / 21 / 16.5	32 / 29 / 23 / 17	34 / 29 / 23 / 18
	Outdoor	Cooling/Heating		100 / 100	100 / 100	100 / 100
Exterior dimensions	Indoor	HeightxWidthxDepth	mm	250 x 1620 x 690		
	Outdoor			1300 x 970 x 370		
Net weight	Indoor		kg	43		
	Outdoor			99		
Ref.piping size	Liquid/Gas		ømm	9.52(3/8") / 15.88(5/8")		
Refrigerant line (one way) length			m	Max.100		
Vertical height differences		Outdoor is higher/lower	m	Max.50 / Max.15		
Outdoor operating temperature range		Cooling	°CDB	-15 to 50*2		
		Heating	°CWB	-20 to 20		
Air filter, Q'ty				Pocket Plastic net x2(Washable)		
Remote control (option)				Wired:RC-EX3D, RC-E5, RC-ES1 Wireless:RCN-E-E3		

The values are for simultaneous Multi operation.

R32				Hyper Inverter				
Set model name				FDE71VNXWPVH	FDE100VNXWPVH	FDE125VNXWPVH	FDE140VNXWPVH	FDE140VNXWTVH
				Twin				Triple
Indoor unit				FDE40VH x 2	FDE50VH x 2	FDE60VH x 2	FDE71VH x 2	FDE50VH x 3
Outdoor unit				FDC71VNX-W	FDC100VNX-W	FDC125VNX-W	FDC140VNX-W	FDC140VNX-W
Power source				1 Phase 220-240V, 50Hz / 220V, 60Hz				
Nominal cooling capacity (Min - Max)			kW	7.1 (3.2 - 8.0)	10.0 (3.5 - 11.2)	12.5 (3.5 - 14.0)	14.0 (3.5 - 16.0)	14.0 (3.5 - 16.0)
Nominal heating capacity (Min - Max)			kW	8.0 (3.6 - 9.0)	11.2 (2.7 - 12.5)	14.0 (2.7 - 17.0)	16.0 (2.7 - 18.0)	16.0 (2.7 - 18.0)
Power consumption		Cooling/Heating	kW	1.76 / 2.10	2.48 / 2.88	3.49 / 3.27	4.16 / 3.97	3.72 / 4.11
EER/COP		Cooling/Heating		4.03 / 3.81	4.04 / 3.89	3.58 / 4.29	3.36 / 4.03	3.76 / 3.89
Inrush current			A	5	5	5	5	5
Max. current				19.1	25	27	27	27
Sound power level*1	Indoor*3	Cooling/Heating	dB(A)	60 / 60	60 / 60	60 / 60	60 / 60	60 / 60
	Outdoor	Cooling/Heating		66 / 66	67 / 67	68 / 70	69 / 71	69 / 71
Sound pressure level*1	Indoor*3	Cooling (P-Hi/Hi/Me/Lo)		46 / 38 / 36 / 31	46 / 38 / 36 / 31	47 / 41 / 37 / 32	47 / 41 / 37 / 32	46 / 38 / 36 / 31
		Heating (P-Hi/Hi/Me/Lo)		46 / 38 / 36 / 31	46 / 38 / 36 / 31	47 / 41 / 37 / 32	47 / 41 / 37 / 32	46 / 38 / 36 / 31
	Outdoor	Cooling/Heating		51 / 51	53 / 51	53 / 54	54 / 54	54 / 54
Air flow	Indoor*3	Cooling (P-Hi/Hi/Me/Lo)	m^3/min	13 / 10 / 9 / 7	13 / 10 / 9 / 7	20 / 16 / 13 / 10	20 / 16 / 13 / 10	13 / 10 / 9 / 7
		Heating (P-Hi/Hi/Me/Lo)		13 / 10 / 9 / 7	13 / 10 / 9 / 7	20 / 16 / 13 / 10	20 / 16 / 13 / 10	13 / 10 / 9 / 7
	Outdoor	Cooling/Heating		60 / 50	100 / 100	100 / 100	100 / 100	100 / 100
Exterior dimensions	Indoor	HeightxWidthxDepth	mm	210 x 1070 x 690		210 x 1320 x 690		210 x 1070 x 690
	Outdoor			750 x 880(+88) x 340	1300 x 970 x 370			
Net weight	Indoor		kg	28		33		28
	Outdoor			60	97			
Ref.piping size	Liquid/Gas		ømm	9.52(3/8") / 15.88(5/8")				
Refrigerant line (one way) length			m	Max. 50	Max. 100		Max. 85	
Vertical height differences		Outdoor is higher/lower	m	Max.30 / Max.15	Max.50 / Max.15			
Outdoor operating temperature range		Cooling	°CDB	-15 to 50*2				
		Heating	°CWB	-20 to 20				
Air filter, Q'ty				Pocket plastic net x 2(Washable)				
Remote control (option)				Wired:RC-EX3D, RC-E5, RC-ES1 Wireless:RCN-E-E3				

NOTES:

The data are measured under the following conditions(R32 : ISO-T1, -H1).
Cooling:Indoor temp. of 27°CDB, 19°CWB, and outdoor temp. of 35°CDB. Heating:Indoor temp. of 20°CDB, and outdoor temp. of 7°CDB, 6°CWB.
*1 : Indicates the value in an anechoic chamber. During operation these values are somewhat higher due to ambient conditions.
*2 : If a cooling operation is conducted when the outdoor air temperature is –5°C or lower, the outdoor unit should be installed at a place where it is not influenced by natural wind. If wind blows, the low pressure will drop and compressor frequency will increase, this will cause the capacity to drop and may cause the unit to break down.
*3 : The values are for one indoor unit operation. (Multi system only)

The values are for simultaneous Multi operation.

R32				Hyper Inverter			
Set model name				FDE100VSXWPVH	FDE125VSXWPVH	FDE140VSXWPVH	FDE140VSXWTVH
					Twin		Triple
Indoor unit				FDE50VH x 2	FDE60VH x 2	FDE71VH x 2	FDE50VH x 3
Outdoor unit				FDC100VSX-W	FDC125VSX-W	FDC140VSX-W	FDC140VSX-W
Power source				3 Phase 380-415V, 50Hz / 380V, 60Hz			
Nominal cooling capacity (Min - Max)			kW	10.0 (3.5 - 11.2)	12.5 (3.5 - 14.0)	14.0 (3.5 - 16.0)	14.0 (3.5 - 16.0)
Nominal heating capacity (Min - Max)			kW	11.2 (2.7 - 16.0)	14.0 (2.7 - 18.0)	16.0 (2.7 - 20.0)	16.0 (2.7 - 20.0)
Power consumption		Cooling/Heating	kW	2.48 / 2.88	3.49 / 3.27	4.16 / 3.97	3.72 / 4.11
EER/COP		Cooling/Heating		4.04 / 3.89	3.58 / 4.29	3.36 / 4.03	3.76 / 3.89
Inrush current			A	5	5	5	5
Max. current				14	14	14	14
Sound power level*1	Indoor*3	Cooling/Heating	dB(A)	60 / 60	60 / 60	60 / 60	60 / 60
	Outdoor	Cooling/Heating		67 / 67	68 / 70	69 / 71	69 / 71
Sound pressure level*1	Indoor*3	Cooling (P-Hi/Hi/Me/Lo)		46 / 38 / 36 / 31	47 / 41 / 37 / 32	47 / 41 / 37 / 32	46 / 38 / 36 / 31
		Heating (P-Hi/Hi/Me/Lo)		46 / 38 / 36 / 31	47 / 41 / 37 / 32	47 / 41 / 37 / 32	46 / 38 / 36 / 31
	Outdoor	Cooling/Heating		53 / 51	53 / 54	54 / 54	54 / 54
Air flow	Indoor*3	Cooling (P-Hi/Hi/Me/Lo)	m^3/min	13 / 10 / 9 / 7	20 / 16 / 13 / 10	20 / 16 / 13 / 10	13 / 10 / 9 / 7
		Heating (P-Hi/Hi/Me/Lo)		13 / 10 / 9 / 7	20 / 16 / 13 / 10	20 / 16 / 13 / 10	13 / 10 / 9 / 7
	Outdoor	Cooling/Heating		100 / 100	100 / 100	100 / 100	100 / 100
Exterior dimensions	Indoor	HeightxWidthxDepth	mm	210 x 1070 x 690	210 x 1320 x 690		210 x 1070 x 690
	Outdoor			1300 x 970 x 370			
Net weight	Indoor		kg	28	33		28
	Outdoor			99			
Ref.piping size	Liquid/Gas		ømm	9.52(3/8") / 15.88(5/8")			
Refrigerant line (one way) length			m	Max.100		Max.85	
Vertical height differences		Outdoor is higher/lower	m	Max.50 / Max.15			
Outdoor operating temperature range		Cooling	°CDB	-15 to 50*2			
		Heating	°CWB	-20 to 20			
Air filter, Q'ty				Pocket plastic net x 2(Washable)			
Remote control (option)				Wired:RC-EX3D, RC-E5, RC-ES1 Wireless:RCN-E-E3			

SPECIFICATIONS - FDE -

R410A				Hyper Inverter		
Set model name				FDE100VNXVH	FDE125VNXVH	FDE140VNXVH
Indoor unit				FDE100VH	FDE125VH	FDE140VH
Outdoor unit				FDC100VNX	FDC125VNX	FDC140VNX
Power source				1 Phase 220-240V, 50Hz / 220V, 60Hz		
Nominal cooling capacity (Min - Max)			kW	10.0 (4.0 - 11.2)	12.5 (5.0 - 14.0)	14.0 (5.0 - 16.0)
Nominal heating capacity (Min - Max)			kW	11.2 (4.0 - 12.5)	14.0 (4.0 - 17.0)	16.0 (4.0 - 18.0)
Power consumption		Cooling/Heating	kW	2.55 / 2.68	3.50 / 3.77	4.40 / 4.69
EER/COP		Cooling/Heating		3.92 / 4.18	3.57 / 3.71	3.18 / 3.41
Inrush current			A	5	5	5
Max. current				24	26	26
Sound power level*1	Indoor	Cooling/Heating	dB(A)	64 / 64	64 / 64	65 / 65
	Outdoor	Cooling/Heating		70 / 70	70 / 70	72 / 72
Sound pressure level*1	Indoor	Cooling (P-Hi/Hi/Me/Lo)		48 / 43 / 38 / 34	48 / 45 / 40 / 35	49 / 45 / 40 / 36
		Heating (P-Hi/Hi/Me/Lo)		48 / 43 / 38 / 34	48 / 45 / 40 / 35	49 / 45 / 40 / 36
	Outdoor	Cooling/Heating		48 / 50	48 / 50	49 / 52
Air flow	Indoor	Cooling (P-Hi/Hi/Me/Lo)	m^3/min	32 / 26 / 21 / 16.5	32 / 29 / 23 / 17	34 / 29 / 23 / 18
		Heating (P-Hi/Hi/Me/Lo)		32 / 26 / 21 / 16.5	32 / 29 / 23 / 17	34 / 29 / 23 / 18
	Outdoor	Cooling/Heating		100 / 100	100 / 100	100 / 100
Exterior dimensions	Indoor	HeightxWidthxDepth	mm	250 x 1620 x 690		
	Outdoor			1300 x 970 x 370		
Net weight	Indoor		kg	43		
	Outdoor			105		
Ref.piping size	Liquid/Gas		ømm	9.52(3/8") / 15.88(5/8")		
Refrigerant line (one way) length			m	Max.100		
Vertical height differences		Outdoor is higher/lower	m	Max.30 / Max.15		
Outdoor operating temperature range		Cooling	°CDB	-15 to 43*2		
		Heating	°CWB	-20 to 20		
Air filter, Q'ty				Pocket Plastic net x2(Washable)		
Remote control (option)				Wired:RC-EX3D, RC-E5, RC-ES1 Wireless:RCN-E-E3		

R410A				Hyper Inverter		
Set model name				FDE100VSXVH	FDE125VSXVH	FDE140VSXVH
Indoor unit				FDE100VH	FDE125VH	FDE140VH
Outdoor unit				FDC100VSX	FDC125VSX	FDC140VSX
Power source				3 Phase 380-415V, 50Hz / 380V, 60Hz		
Nominal cooling capacity (Min - Max)			kW	10.0 (4.0 - 11.2)	12.5 (5.0 - 14.0)	14.0 (5.0 - 16.0)
Nominal heating capacity (Min - Max)			kW	11.2 (4.0 - 16.0)	14.0 (4.0 - 18.0)	16.0 (4.0 - 20.0)
Power consumption		Cooling/Heating	kW	2.55 / 2.68	3.50 / 3.77	4.40 / 4.69
EER/COP		Cooling/Heating		3.92 / 4.18	3.57 / 3.71	3.18 / 3.41
Inrush current			A	5	5	5
Max. current				15	15	15
Sound power level*1	Indoor	Cooling/Heating	dB(A)	64 / 64	64 / 64	65 / 65
	Outdoor	Cooling/Heating		70 / 70	70 / 70	72 / 72
Sound pressure level*1	Indoor	Cooling (P-Hi/Hi/Me/Lo)		48 / 43 / 38 / 34	48 / 45 / 40 / 35	49 / 45 / 40 / 36
		Heating (P-Hi/Hi/Me/Lo)		48 / 43 / 38 / 34	48 / 45 / 40 / 35	49 / 45 / 40 / 36
	Outdoor	Cooling/Heating		48 / 50	48 / 50	49 / 52
Air flow	Indoor	Cooling (P-Hi/Hi/Me/Lo)	m^3/min	32 / 26 / 21 / 16.5	32 / 29 / 23 / 17	34 / 29 / 23 / 18
		Heating (P-Hi/Hi/Me/Lo)		32 / 26 / 21 / 16.5	32 / 29 / 23 / 17	34 / 29 / 23 / 18
	Outdoor	Cooling/Heating		100 / 100	100 / 100	100 / 100
Exterior dimensions	Indoor	HeightxWidthxDepth	mm	250 x 1620 x 690		
	Outdoor			1300 x 970 x 370		
Net weight	Indoor		kg	43		
	Outdoor			105		
Ref.piping size	Liquid/Gas		ømm	9.52(3/8") / 15.88(5/8")		
Refrigerant line (one way) length			m	Max.100		
Vertical height differences		Outdoor is higher/lower	m	Max.30 / Max.15		
Outdoor operating temperature range		Cooling	°CDB	-15 to 43*2		
		Heating	°CWB	-20 to 20		
Air filter, Q'ty				Pocket Plastic net x2(Washable)		
Remote control (option)				Wired:RC-EX3D, RC-E5, RC-ES1 Wireless:RCN-E-E3		

NOTES:

The data are measured under the following conditions(ISO-T1).
Cooling:Indoor temp. of 27°CDB, 19°CWB, and outdoor temp. of 35°CDB. Heating:Indoor temp. of 20°CDB, and outdoor temp. of 7°CDB, 6°CWB.
*1 : Indicates the value in an anechoic chamber. During operation these values are somewhat higher due to ambient conditions.
*2 : If a cooling operation is conducted when the outdoor air temperature is –5°C or lower, the outdoor unit should be installed at a place where it is not influenced by natural wind. If wind blows, the low pressure will drop and compressor frequency will increase, this will cause the capacity to drop and may cause the unit to break down.
*3 : The values are for one indoor unit operation. (Multi system only)

The values are for simultaneous Multi operation.

R410A				Hyper Inverter			
Set model name				FDE100VNXPVH	FDE125VNXPVH	FDE140VNXPVH	FDE140VNXTVH
					Twin		Triple
Indoor unit				FDE50VH x 2	FDE60VH x 2	FDE71VH x 2	FDE50VH x 3
Outdoor unit				FDC100VNX	FDC125VNX	FDC140VNX	FDC140VNX
Power source				1 Phase 220-240V, 50Hz / 220V, 60Hz			
Nominal cooling capacity (Min - Max)			kW	10.0 (4.0 - 11.2)	12.5 (5.0 - 14.0)	14.0 (5.0 - 16.0)	14.0 (5.0 - 16.0)
Nominal heating capacity (Min - Max)			kW	11.2 (4.0 - 12.5)	14.0 (4.0 - 17.0)	16.0 (4.0 - 18.0)	16.0 (4.0 - 18.0)
Power consumption		Cooling/Heating	kW	3.00 / 3.39	3.97 / 3.70	4.67 / 4.58	4.66 / 4.53
EER/COP		Cooling/Heating		3.33 / 3.30	3.15 / 3.78	3.00 / 3.49	3.00 / 3.53
Inrush current			A	5	5	5	5
Max. current				24	26	26	26
Sound power level*1	Indoor*3	Cooling/Heating	dB(A)	60 / 60	60 / 60	60 / 60	60 / 60
	Outdoor	Cooling/Heating		70 / 70	70 / 70	72 / 72	72 / 72
Sound pressure level*1	Indoor*3	Cooling (P-Hi/Hi/Me/Lo)		46 / 38 / 36 / 31	47 / 41 / 37 / 32	47 / 41 / 37 / 32	46 / 38 / 36 / 31
		Heating (P-Hi/Hi/Me/Lo)		46 / 38 / 36 / 31	47 / 41 / 37 / 32	47 / 41 / 37 / 32	46 / 38 / 36 / 31
	Outdoor	Cooling/Heating		48 / 50	48 / 50	49 / 52	49 / 52
Air flow	Indoor*3	Cooling (P-Hi/Hi/Me/Lo)	m^3/min	13 / 10 / 9 / 7	20 / 16 / 13 / 10	20 / 16 / 13 / 10	13 / 10 / 9 / 7
		Heating (P-Hi/Hi/Me/Lo)		13 / 10 / 9 / 7	20 / 16 / 13 / 10	20 / 16 / 13 / 10	13 / 10 / 9 / 7
	Outdoor	Cooling/Heating		100 / 100	100 / 100	100 / 100	100 / 100
Exterior dimensions	Indoor	HeightxWidthxDepth	mm	210 x 1070 x 690	210 x 1320 x 690		210 x 1070 x 690
	Outdoor			1300 x 970 x 370			
Net weight	Indoor		kg	28	33		28
	Outdoor			105			
Ref.piping size	Liquid/Gas		ømm	9.52(3/8") / 15.88(5/8")			
Refrigerant line (one way) length			m	Max. 100			
Vertical height differences		Outdoor is higher/lower	m	Max.30 / Max.15			
Outdoor operating temperature range		Cooling	°CDB	-15 to 43*2			
		Heating	°CWB	-20 to 20			
Air filter, Q'ty				Pocket plastic net x 2(Washable)			
Remote control (option)				Wired:RC-EX3D, RC-E5, RC-ES1 Wireless:RCN-E-E3			

The values are for simultaneous Multi operation.

R410A				Hyper Inverter			
Set model name				FDE100VSXPVH	FDE125VSXPVH	FDE140VSXPVH	FDE140VSXTVH
					Twin		Triple
Indoor unit				FDE50VH x 2	FDE60VH x 2	FDE71VH x 2	FDE50VH x 3
Outdoor unit				FDC100VSX	FDC125VSX	FDC140VSX	FDC140VSX
Power source				3 Phase 380-415V, 50Hz / 380V, 60Hz			
Nominal cooling capacity (Min - Max)			kW	10.0 (4.0 - 11.2)	12.5 (5.0 - 14.0)	14.0 (5.0 - 16.0)	14.0 (5.0 - 16.0)
Nominal heating capacity (Min - Max)			kW	11.2 (4.0 - 16.0)	14.0 (4.0 - 18.0)	16.0 (4.0 - 20.0)	16.0 (4.0 - 20.0)
Power consumption		Cooling/Heating	kW	3.00 / 3.39	3.97 / 3.70	4.67 / 4.58	4.66 / 4.53
EER/COP		Cooling/Heating		3.33 / 3.30	3.15 / 3.78	3.00 / 3.49	3.00 / 3.53
Inrush current			A	5	5	5	5
Max. current				15	15	15	15
Sound power level*1	Indoor*3	Cooling/Heating	dB(A)	60 / 60	60 / 60	60 / 60	60 / 60
	Outdoor	Cooling/Heating		70 / 70	70 / 70	72 / 72	72 / 72
Sound pressure level*1	Indoor*3	Cooling (P-Hi/Hi/Me/Lo)		46 / 38 / 36 / 31	47 / 41 / 37 / 32	47 / 41 / 37 / 32	46 / 38 / 36 / 31
		Heating (P-Hi/Hi/Me/Lo)		46 / 38 / 36 / 31	47 / 41 / 37 / 32	47 / 41 / 37 / 32	46 / 38 / 36 / 31
	Outdoor	Cooling/Heating		48 / 50	48 / 50	49 / 52	49 / 52
Air flow	Indoor*3	Cooling (P-Hi/Hi/Me/Lo)	m^3/min	13 / 10 / 9 / 7	20 / 16 / 13 / 10	20 / 16 / 13 / 10	13 / 10 / 9 / 7
		Heating (P-Hi/Hi/Me/Lo)		13 / 10 / 9 / 7	20 / 16 / 13 / 10	20 / 16 / 13 / 10	13 / 10 / 9 / 7
	Outdoor	Cooling/Heating		100 / 100	100 / 100	100 / 100	100 / 100
Exterior dimensions	Indoor	HeightxWidthxDepth	mm	210 x 1070 x 690	210 x 1320 x 690		210 x 1070 x 690
	Outdoor			1300 x 970 x 370			
Net weight	Indoor		kg	28	33		28
	Outdoor			105			
Ref.piping size	Liquid/Gas		ømm	9.52(3/8") / 15.88(5/8")			
Refrigerant line (one way) length			m	Max.100			
Vertical height differences		Outdoor is higher/lower	m	Max.30 / Max.15			
Outdoor operating temperature range		Cooling	°CDB	-15 to 43*2			
		Heating	°CWB	-20 to 20			
Air filter, Q'ty				Pocket plastic net x 2(Washable)			
Remote control (option)				Wired:RC-EX3D, RC-E5, RC-ES1 Wireless:RCN-E-E3			

SPECIFICATIONS - FDE -

R32				Micro Inverter		
Set model name				FDE100VNAWVH	FDE125VNAWVH	FDE140VNAWVH
Indoor unit				FDE100VH	FDE125VH	FDE140VH
Outdoor unit				FDC100VNA-W	FDC125VNA-W	FDC140VNA-W
Power source				1 Phase 220-240V, 50Hz / 220V, 60Hz		
Nominal cooling capacity (Min - Max)			kW	10.0 (4.0 - 11.2)	12.5 (5.0 - 14.0)	13.6 (5.0 - 14.5)
Nominal heating capacity (Min - Max)			kW	11.2 (4.0 - 12.5)	14.0 (4.0 - 16.0)	15.5 (4.0 - 16.5)
Power consumption		Cooling/Heating	kW	2.85 / 2.54	4.45 / 3.74	5.05/ 4.18
EER/COP		Cooling/Heating		3.51 / 4.41	2.81 / 3.74	2.69 / 3.71
Inrush current			A	5	5	5
Max. current				24	24	24
Sound power level*1	Indoor	Cooling/Heating	dB(A)	64 / 64	64 / 64	65 / 65
	Outdoor	Cooling/Heating		69 / 70	71 / 71	72 / 73
Sound pressure level*1	Indoor	Cooling (P-Hi/Hi/Me/Lo)		48 / 43 / 38 / 34	48 / 45 / 40 / 35	49 / 45 / 40 / 36
		Heating (P-Hi/Hi/Me/Lo)		48 / 43 / 38 / 34	48 / 45 / 40 / 35	49 / 45 / 40 / 36
	Outdoor	Cooling/Heating		54 / 55	54 / 56	56 / 58
Air flow	Indoor	Cooling (P-Hi/Hi/Me/Lo)	m^3/min	32 / 26 / 21 / 16.5	32 / 29 / 23 / 17	34 / 29 / 23 / 18
		Heating (P-Hi/Hi/Me/Lo)		32 / 26 / 21 / 16.5	32 / 29 / 23 / 17	34 / 29 / 23 / 18
	Outdoor	Cooling/Heating		75 / 73	75 / 73	75 / 73
Exterior dimensions	Indoor	HeightxWidthxDepth	mm	250 x 1620 x 690		
	Outdoor			845 x 970 x 370		
Net weight	Indoor		kg	43		
	Outdoor			77		
Ref.piping size	Liquid/Gas		ømm	9.52(3/8") / 15.88(5/8")		
Refrigerant line (one way) length			m	Max.50		
Vertical height differences		Outdoor is higher/lower	m	Max.50 / Max.15		
Outdoor operating temperature range		Cooling	°CDB	-15 to 50*2		
		Heating	°CWB	-20 to 20		
Air filter, Q'ty				Pocket Plastic net x2(Washable)		
Remote control (option)				Wired:RC-EX3D, RC-E5, RC-ES1 Wireless:RCN-E-E3		

R32				Micro Inverter		
Set model name				FDE100VSAWVH	FDE125VSAWVH	FDE140VSAWVH
Indoor unit				FDE100VH	FDE125VH	FDE140VH
Outdoor unit				FDC100VSA-W	FDC125VSA-W	FDC140VSA-W
Power source				3 Phase 380-415V, 50Hz / 380V, 60Hz		
Nominal cooling capacity (Min - Max)			kW	10.0 (4.0 - 11.2)	12.5 (5.0 - 14.0)	13.6 (5.0 - 14.5)
Nominal heating capacity (Min - Max)			kW	11.2 (4.0 - 12.5)	14.0 (4.0 - 16.0)	15.5 (4.0 - 16.5)
Power consumption		Cooling/Heating	kW	2.85 / 2.54	4.45 / 3.74	5.05 / 4.18
EER/COP		Cooling/Heating		3.51 / 4.41	2.81 / 3.74	2.69 / 3.71
Inrush current			A	5	5	5
Max. current				15	15	15
Sound power level*1	Indoor	Cooling/Heating	dB(A)	64 / 64	64 / 64	65 / 65
	Outdoor	Cooling/Heating		69 / 70	71 / 71	72 / 73
Sound pressure level*1	Indoor	Cooling (P-Hi/Hi/Me/Lo)		48 / 43 / 38 / 34	48 / 45 / 40 / 35	49 / 45 / 40 / 36
		Heating (P-Hi/Hi/Me/Lo)		48 / 43 / 38 / 34	48 / 45 / 40 / 35	49 / 45 / 40 / 36
	Outdoor	Cooling/Heating		54 / 55	54 / 56	56 / 58
Air flow	Indoor	Cooling (P-Hi/Hi/Me/Lo)	m^3/min	32 / 26 / 21 / 16.5	32 / 29 / 23 / 17	34 / 29 / 23 / 18
		Heating (P-Hi/Hi/Me/Lo)		32 / 26 / 21 / 16.5	32 / 29 / 23 / 17	34 / 29 / 23 / 18
	Outdoor	Cooling/Heating		75 / 73	75 / 73	75 / 73
Exterior dimensions	Indoor	HeightxWidthxDepth	mm	250 x 1620 x 690		
	Outdoor			845 x 970 x 370		
Net weight	Indoor		kg	43		
	Outdoor			78		
Ref.piping size	Liquid/Gas		ømm	9.52(3/8") / 15.88(5/8")		
Refrigerant line (one way) length			m	Max.50		
Vertical height differences		Outdoor is higher/lower	m	Max.50 / Max.15		
Outdoor operating temperature range		Cooling	°CDB	-15 to 50*2		
		Heating	°CWB	-20 to 20		
Air filter, Q'ty				Pocket Plastic net x2(Washable)		
Remote control (option)				Wired:RC-EX3D, RC-E5, RC-ES1 Wireless:RCN-E-E3		

NOTES:

The data are measured under the following conditions(ISO-T1, -H1).
Cooling:Indoor temp. of 27°CDB, 19°CWB, and outdoor temp. of 35°CDB. Heating:Indoor temp. of 20°CDB, and outdoor temp. of 7°CDB, 6°CWB.
*1 : Indicates the value in an anechoic chamber. During operation these values are somewhat higher due to ambient conditions.
*2 : If a cooling operation is conducted when the outdoor air temperature is –5°C or lower, the outdoor unit should be installed at a place where it is not influenced by natural wind. If wind blows, the low pressure will drop and compressor frequency will increase, this will cause the capacity to drop and may cause the unit to break down.
*3 : The values are for one indoor unit operation. (Multi system only)

The values are for simultaneous Multi operation.

R32				Micro Inverter			
Set model name				FDE100VNAWPVH	FDE125VNAWPVH	FDE140VNAWPVH	FDE140VNAWTVH
					Twin		Triple
Indoor unit				FDE50VH x 2	FDE60VH x 2	FDE71VH x 2	FDE50VH x 3
Outdoor unit				FDC100VNA-W	FDC125VNA-W	FDC140VNA-W	FDC140VNA-W
Power source				1 Phase 220-240V, 50Hz / 220V, 60Hz			
Nominal cooling capacity (Min - Max)			kW	10.0 (4.0 - 11.2)	12.5 (5.0 - 14.0)	13.6 (5.0 - 14.5)	13.6 (5.0 - 14.5)
Nominal heating capacity (Min - Max)			kW	11.2 (4.0 - 12.5)	14.0 (4.0 - 16.0)	15.5 (4.0 - 16.5)	15.5 (4.0 - 16.5)
Power consumption		Cooling/Heating	kW	3.12 / 2.99	4.16 / 3.54	4.74 / 4.21	4.74 / 4.21
EER/COP		Cooling/Heating		3.21 / 3.75	3.00 / 3.95	2.87 / 3.68	2.87 / 3.68
Inrush current			A	5	5	5	5
Max. current				24	24	24	24
Sound power level*1	Indoor*3	Cooling/Heating	dB(A)	60 / 60	60 / 60	60 / 60	60 / 60
	Outdoor	Cooling/Heating		69 / 70	71 / 71	72 / 73	72 / 73
Sound pressure level*1	Indoor*3	Cooling (P-Hi/Hi/Me/Lo)		46 / 38 / 36 / 31	47 / 41 / 37 / 32	47 / 41 / 37 / 32	46 / 38 / 36 / 31
		Heating (P-Hi/Hi/Me/Lo)		46 / 38 / 36 / 31	47 / 41 / 37 / 32	47 / 41 / 37 / 32	46 / 38 / 36 / 31
	Outdoor	Cooling/Heating		54 / 55	54 / 56	56 / 58	56 / 58
Air flow	Indoor*3	Cooling (P-Hi/Hi/Me/Lo)	m^3/min	13 / 10 / 9 / 7	20 / 16 / 13 / 10	20 / 16 / 13 / 10	13 / 10 / 9 / 7
		Heating (P-Hi/Hi/Me/Lo)		13 / 10 / 9 / 7	20 / 16 / 13 / 10	20 / 16 / 13 / 10	13 / 10 / 9 / 7
	Outdoor	Cooling/Heating		75 / 73	75 / 73	75 / 73	75 / 73
Exterior dimensions	Indoor	HeightxWidthxDepth	mm	210 x 1070 x 690	210 x 1320 x 690		210 x 1070 x 690
	Outdoor			845 x 970 x 370			
Net weight	Indoor		kg	28	33		28
	Outdoor			77			
Ref.piping size	Liquid/Gas		ømm	9.52(3/8") / 15.88(5/8")			
Refrigerant line (one way) length			m	Max. 50			
Vertical height differences		Outdoor is higher/lower	m	Max.50 / Max.15			
Outdoor operating temperature range		Cooling	°CDB	-15 to 50*2			
		Heating	°CWB	-20 to 20			
Air filter, Q'ty				Pocket plastic net x 2(Washable)			
Remote control (option)				Wired:RC-EX3D, RC-E5, RC-ES1 Wireless:RCN-E-E3			

The values are for simultaneous Multi operation.

R32				Micro Inverter			
Set model name				FDE100VSAWPVH	FDE125VSAWPVH	FDE140VSAWPVH	FDE140VSAWTVH
					Twin		Triple
Indoor unit				FDE50VH x 2	FDE60VH x 2	FDE71VH x 2	FDE50VH x 3
Outdoor unit				FDC100VSA-W	FDC125VSA-W	FDC140VSA-W	FDC140VSA-W
Power source				3 Phase 380-415V, 50Hz / 380V, 60Hz			
Nominal cooling capacity (Min - Max)			kW	10.0 (4.0 - 11.2)	12.5 (5.0 - 14.0)	13.6 (5.0 - 14.5)	13.6 (5.0 - 14.5)
Nominal heating capacity (Min - Max)			kW	11.2 (4.0 - 12.5)	14.0 (4.0 - 16.0)	15.5 (4.0 - 16.5)	15.5 (4.0 - 16.5)
Power consumption		Cooling/Heating	kW	3.12 / 2.99	4.16 / 3.54	4.74 / 4.21	4.74 / 4.21
EER/COP		Cooling/Heating		3.21 / 3.75	3.00 / 3.95	2.87 / 3.68	2.87 / 3.68
Inrush current			A	5	5	5	5
Max. current				15	15	15	15
Sound power level*1	Indoor*3	Cooling/Heating	dB(A)	60 / 60	60 / 60	60 / 60	60 / 60
	Outdoor	Cooling/Heating		69 / 70	71 / 71	72 / 73	72 / 73
Sound pressure level*1	Indoor*3	Cooling (P-Hi/Hi/Me/Lo)		46 / 38 / 36 / 31	47 / 41 / 37 / 32	47 / 41 / 37 / 32	46 / 38 / 36 / 31
		Heating (P-Hi/Hi/Me/Lo)		46 / 38 / 36 / 31	47 / 41 / 37 / 32	47 / 41 / 37 / 32	46 / 38 / 36 / 31
	Outdoor	Cooling/Heating		54 / 55	54 / 56	56 / 58	56 / 58
Air flow	Indoor*3	Cooling (P-Hi/Hi/Me/Lo)	m^3/min	13 / 10 / 9 / 7	20 / 16 / 13 / 10	20 / 16 / 13 / 10	13 / 10 / 9 / 7
		Heating (P-Hi/Hi/Me/Lo)		13 / 10 / 9 / 7	20 / 16 / 13 / 10	20 / 16 / 13 / 10	13 / 10 / 9 / 7
	Outdoor	Cooling/Heating		75 / 73	75 / 73	75 / 73	75 / 73
Exterior dimensions	Indoor	HeightxWidthxDepth	mm	210 x 1070 x 690	210 x 1320 x 690		210 x 1070 x 690
	Outdoor			845 x 970 x 370			
Net weight	Indoor		kg	28	33		28
	Outdoor			78			
Ref.piping size	Liquid/Gas		ømm	9.52(3/8") / 15.88(5/8")			
Refrigerant line (one way) length			m	Max.50			
Vertical height differences		Outdoor is higher/lower	m	Max.50 / Max.15			
Outdoor operating temperature range		Cooling	°CDB	-15 to 50*2			
		Heating	°CWB	-20 to 20			
Air filter, Q'ty				Pocket plastic net x 2(Washable)			
Remote control (option)				Wired:RC-EX3D, RC-E5, RC-ES1 Wireless:RCN-E-E3			

SPECIFICATIONS - FDE -

The values are for simultaneous Multi operation.

R32				Micro Inverter			
Set model name				FDE200VSAWPVH	FDE250VSAWPVH	FDE280VSAWPVH	FDE200VSAWTVH
				Twin			Triple
Indoor unit				FDE100VH x 2	FDE125VH x 2	FDE140VH x 2	FDE71VH x 3
Outdoor unit				FDC200VSA-W	FDC250VSA-W	FDC280VSA-W	FDC200VSA-W
Power source				3 Phase 380-415V, 50Hz / 380V, 60Hz			
Nominal cooling capacity (Min - Max)			kW	20.0 (6.7 - 22.4)	25.0 (6.7 - 28.0)	27.0 (7.1 - 31.5)	20.0 (7.5 - 22.4)
Nominal heating capacity (Min - Max)			kW	22.4 (6.6 - 25.0)	28.0 (5.2 - 31.5)	30.0 (5.8 - 33.5)	22.4 (6.6 - 25.0)
Power consumption		Cooling/Heating	kW	6.29 / 5.66	8.20 / 7.93	9.31 / 8.98	6.29 / 5.66
EER/COP		Cooling/Heating		3.18 / 3.96	3.05 / 3.53	2.90 / 3.34	3.18 / 3.96
Inrush current			A	5	5	5	5
Max. current				19	20	20	19
Sound power level*1	Indoor*3	Cooling/Heating	dB(A)	64 / 64	64 / 64	65 / 65	60 / 60
	Outdoor	Cooling/Heating		72 / 74	73 / 75	75 / 77	72 / 74
Sound pressure level*1	Indoor*3	Cooling (P-Hi/Hi/Me/Lo)		48 / 43 / 38 / 34	48 / 45 / 40 / 35	49 / 45 / 40 / 36	47 / 41 / 37 / 32
		Heating (P-Hi/Hi/Me/Lo)		48 / 43 / 38 / 34	48 / 45 / 40 / 35	49 / 45 / 40 / 36	47 / 41 / 37 / 32
	Outdoor	Cooling/Heating		58 / 59	58 / 62	61 / 63	58 / 59
Air flow	Indoor*3	Cooling (P-Hi/Hi/Me/Lo)	m^3/min	32 / 26 / 21 / 16.5	32 / 29 / 23 / 17	34 / 29 / 23 / 18	20 / 16 / 13 / 10
		Heating (P-Hi/Hi/Me/Lo)		32 / 26 / 21 / 16.5	32 / 29 / 23 / 17	34 / 29 / 23 / 18	20 / 16 / 13 / 10
	Outdoor	Cooling/Heating		148 / 134	148 / 153	136 / 140	148 / 134
Exterior dimensions	Indoor	HeightxWidthxDepth	mm	250 x 1620 x 690			210 x 1320 x 690
	Outdoor			1505 x 970 x 370			
Net weight	Indoor		kg	43			33
	Outdoor			144	145	155	144
Ref.piping size	Liquid/Gas		ømm	9.52(3/8") / 22.22(7/8")	12.7(1/2") / 22.22(7/8")		9.52(3/8") / 22.22(7/8")
Refrigerant line (one way) length			m	Max.70		Max.60	Max.70
Vertical height differences	Outdoor is higher/lower		m	Max.50*4 / Max.15			
Outdoor operating temperature range	Cooling		°CDB	-15 to 50*2			
	Heating		°CWB	-20 to 20			
Air filter, Q'ty				Pocket plastic net x 2(Washable)			
Remote control (option)				Wired:RC-EX3D, RC-E5, RC-ES1 Wireless:RCN-E-E3			

The values are for simultaneous Multi operation.

R32				Micro Inverter		
Set model name				FDE200VSAWDVH	FDE250VSAWDVH	FDE280VSAWDVH
				Double Twin		
Indoor unit				FDE50VH x 4	FDE60VH x 4	FDE71VH x 4
Outdoor unit				FDC200VSA-W	FDC250VSA-W	FDC280VSA-W
Power source				3 Phase 380-415V, 50Hz / 380V, 60Hz		
Nominal cooling capacity (Min - Max)			kW	20.0 (7.8 - 22.4)	25.0 (7.8 - 28.0)	27.0 (7.5 - 31.5)
Nominal heating capacity (Min - Max)			kW	22.4 (6.6 - 25.0)	28.0 (5.2 - 31.5)	30.0 (5.8 - 33.5)
Power consumption		Cooling/Heating	kW	6.29 / 5.66	8.04 / 7.32	9.15 / 8.98
EER/COP		Cooling/Heating		3.18 / 3.96	3.11 / 3.83	2.95 / 3.34
Inrush current			A	5	5	5
Max. current				19	20	20
Sound power level*1	Indoor*3	Cooling/Heating	dB(A)	60 / 60	60 / 60	60 / 60
	Outdoor	Cooling/Heating		72 / 74	73 / 75	75 / 77
Sound pressure level*1	Indoor*3	Cooling (P-Hi/Hi/Me/Lo)		46 / 38 / 36 / 31	47 / 41 / 37 / 32	47 / 41 / 37 / 32
		Heating (P-Hi/Hi/Me/Lo)		46 / 38 / 36 / 31	47 / 41 / 37 / 32	47 / 41 / 37 / 32
	Outdoor	Cooling/Heating		58 / 59	58 / 62	61 / 63
Air flow	Indoor*3	Cooling (P-Hi/Hi/Me/Lo)	m^3/min	13 / 10 / 9 / 7	20 / 16 / 13 / 10	20 / 16 / 13 / 10
		Heating (P-Hi/Hi/Me/Lo)		13 / 10 / 9 / 7	20 / 16 / 13 / 10	20 / 16 / 13 / 10
	Outdoor	Cooling/Heating		148 / 134	148 / 153	136 / 140
Exterior dimensions	Indoor	HeightxWidthxDepth	mm	210 x 1070 x 690	210 x 1320 x 690	
	Outdoor			1505 x 970 x 370		
Net weight	Indoor		kg	28	33	
	Outdoor			144	145	155
Ref.piping size	Liquid/Gas		ømm	9.52(3/8") / 22.22(7/8")	12.7(1/2") / 22.22(7/8")	
Refrigerant line (one way) length			m	Max.70		Max.60
Vertical height differences	Outdoor is higher/lower		m	Max.50*4 / Max.15		
Outdoor operating temperature range	Cooling		°CDB	-15 to 50*2		
	Heating		°CWB	-20 to 20		
Air filter, Q'ty				Pocket plastic net x 2(Washable)		
Remote control (option)				Wired:RC-EX3D, RC-E5, RC-ES1 Wireless:RCN-E-E3		

NOTES:

The data are measured under the following conditions(R32 : ISO-T1, -H1 / R410A : ISO-T1).
Cooling:Indoor temp. of 27°CDB, 19°CWB, and outdoor temp. of 35°CDB. Heating:Indoor temp. of 20°CDB, and outdoor temp. of 7°CDB, 6°CWB.
*1 : Indicates the value in an anechoic chamber. During operation these values are somewhat higher due to ambient conditions.
*2 : If a cooling operation is conducted when the outdoor air temperature is –5°C or lower, the outdoor unit should be installed at a place where it is not influenced by natural wind. If wind blows, the low pressure will drop and compressor frequency will increase, this will cause the capacity to drop and may cause the unit to break down.
*3 : The values are for one indoor unit operation. (Multi system only)
*4 : In case of following conditions:Max.50m(Outdoor unit is higher & Outdoor temperature ≦ 43°C), Max.30m(Outdoor unit is higher & Outdoor temperature > 43°C)

R410A				Micro Inverter					
Set model name				FDE100VNAVH	FDE125VNAVH	FDE140VNAVH	FDE100VSAVH	FDE125VSAVH	FDE140VSAVH
Indoor unit				FDE100VH	FDE125VH	FDE140VH	FDE100VH	FDE125VH	FDE140VH
Outdoor unit				FDC100VNA	FDC125VNA	FDC140VNA	FDC100VSA	FDC125VSA	FDC140VSA
Power source				1 Phase 220-240V, 50Hz / 220V, 60Hz			3 Phase 380-415V, 50Hz / 380V, 60Hz		
Nominal cooling capacity (Min - Max)			kW	10.0 (4.0 - 11.2)	12.5 (5.0 - 14.0)	13.6 (5.0 - 14.5)	10.0 (4.0 - 11.2)	12.5 (5.0 - 14.0)	13.6 (5.0 - 14.5)
Nominal heating capacity (Min - Max)			kW	11.2 (4.0 - 12.5)	14.0 (4.0 - 16.0)	15.5 (4.0 - 16.5)	11.2 (4.0 - 12.5)	14.0 (4.0 - 16.0)	15.5 (4.0 - 16.5)
Power consumption		Cooling/Heating	kW	2.85 / 2.70	4.45 / 3.74	5.21/ 4.42	2.85 / 2.70	4.45 / 3.74	5.21 / 4.42
EER/COP		Cooling/Heating		3.51 / 4.15	2.81 / 3.74	2.61 / 3.51	3.51 / 4.15	2.81 / 3.74	2.61 / 3.51
Inrush current			A	5	5	5	5	5	5
Max. current				24	24	24	15	15	15
Sound power level*1	Indoor	Cooling/Heating	dB(A)	64 / 64	64 / 64	65 / 65	64 / 64	64 / 64	65 / 65
	Outdoor	Cooling/Heating		70 / 70	71 / 71	73 / 73	70 / 70	71 / 71	73 / 73
Sound pressure level*1	Indoor	Cooling (P-Hi/Hi/Me/Lo)		48 / 43 / 38 / 34	48 / 45 / 40 / 35	49 / 45 / 40 / 36	48 / 43 / 38 / 34	48 / 45 / 40 / 35	49 / 45 / 40 / 36
		Heating (P-Hi/Hi/Me/Lo)		48 / 43 / 38 / 34	48 / 45 / 40 / 35	49 / 45 / 40 / 36	48 / 43 / 38 / 34	48 / 45 / 40 / 35	49 / 45 / 40 / 36
	Outdoor	Cooling/Heating		54 / 56	55/ 57	57 / 59	54 / 56	55/ 57	57 / 59
Air flow	Indoor	Cooling (P-Hi/Hi/Me/Lo)	m^3/min	32 / 26 / 21 / 16.5	32 / 29 / 23 / 17	34 / 29 / 23 / 18	32 / 26 / 21 / 16.5	32 / 29 / 23 / 17	34 / 29 / 23 / 18
		Heating (P-Hi/Hi/Me/Lo)		32 / 26 / 21 / 16.5	32 / 29 / 23 / 17	34 / 29 / 23 / 18	32 / 26 / 21 / 16.5	32 / 29 / 23 / 17	34 / 29 / 23 / 18
	Outdoor	Cooling/Heating		75 / 73	75 / 73	75 / 73	75 / 73	75 / 73	75 / 73
Exterior dimensions	Indoor	HeightxWidthxDepth	mm	250 x 1620 x 690					
	Outdoor			845 x 970 x 370					
Net weight	Indoor		kg	43					
	Outdoor			80			82		
Ref.piping size	Liquid/Gas		ømm	9.52(3/8") / 15.88(5/8")					
Refrigerant line (one way) length			m	Max.50					
Vertical height differences		Outdoor is higher/lower	m	Max.50 / Max.15					
Outdoor operating temperature range		Cooling	°CDB	-15 to 50*2					
		Heating	°CWB	-20 to 20					
Air filter, Q'ty				Pocket Plastic net x2(Washable)					
Remote control (option)				Wired:RC-EX3D, RC-E5, RC-ES1 Wireless:RCN-E-E3					

The values are for simultaneous Multi operation.

R410A				Micro Inverter			
Set model name				FDE100VNAPVH	FDE125VNAPVH	FDE140VNAPVH	FDE140VNATVH
				Twin			Triple
Indoor unit				FDE50VH x 2	FDE60VH x 2	FDE71VH x 2	FDE50VH x 3
Outdoor unit				FDC100VNA	FDC125VNA	FDC140VNA	FDC140VNA
Power source				1 Phase 220-240V, 50Hz / 220V, 60Hz			
Nominal cooling capacity (Min - Max)			kW	10.0 (4.0 - 11.2)	12.5 (5.0 - 14.0)	13.6 (5.0 - 14.5)	13.6 (5.0 - 14.5)
Nominal heating capacity (Min - Max)			kW	11.2 (4.0 - 12.5)	14.0 (4.0 - 16.0)	15.5 (4.0 - 16.5)	15.5 (4.0 - 16.5)
Power consumption		Cooling/Heating	kW	3.12 / 2.99	4.16 / 3.54	4.74 / 4.21	4.74 / 4.21
EER/COP		Cooling/Heating		3.21 / 3.75	3.00 / 3.95	2.87 / 3.68	2.87 / 3.68
Inrush current			A	5	5	5	5
Max. current				24	24	24	24
Sound power level*1	Indoor*3	Cooling/Heating	dB(A)	60 / 60	60 / 60	60 / 60	60 / 60
	Outdoor	Cooling/Heating		70 / 70	71 / 71	73 / 73	73 / 73
Sound pressure level*1	Indoor*3	Cooling (P-Hi/Hi/Me/Lo)		46 / 38 / 36 / 31	47 / 41 / 37 / 32	47 / 41 / 37 / 32	46 / 38 / 36 / 31
		Heating (P-Hi/Hi/Me/Lo)		46 / 38 / 36 / 31	47 / 41 / 37 / 32	47 / 41 / 37 / 32	46 / 38 / 36 / 31
	Outdoor	Cooling/Heating		54 / 56	55 / 57	57 / 59	57 / 59
Air flow	Indoor*3	Cooling (P-Hi/Hi/Me/Lo)	m^3/min	13 / 10 / 9 / 7	20 / 16 / 13 / 10	20 / 16 / 13 / 10	13 / 10 / 9 / 7
		Heating (P-Hi/Hi/Me/Lo)		13 / 10 / 9 / 7	20 / 16 / 13 / 10	20 / 16 / 13 / 10	13 / 10 / 9 / 7
	Outdoor	Cooling/Heating		75 / 73	75 / 73	75 / 73	75 / 73
Exterior dimensions	Indoor	HeightxWidthxDepth	mm	210 x 1070 x 690	210 x 1320 x 690		210 x 1070 x 690
	Outdoor			845 x 970 x 370			
Net weight	Indoor		kg	28	33		28
	Outdoor			80			
Ref.piping size	Liquid/Gas		ømm	9.52(3/8") / 15.88(5/8")			
Refrigerant line (one way) length			m	Max. 50			
Vertical height differences		Outdoor is higher/lower	m	Max.50 / Max.15			
Outdoor operating temperature range		Cooling	°CDB	-15 to 50*2			
		Heating	°CWB	-20 to 20			
Air filter, Q'ty				Pocket plastic net x 2(Washable)			
Remote control (option)				Wired:RC-EX3D, RC-E5, RC-ES1 Wireless:RCN-E-E3			

SPECIFICATIONS - FDE -

The values are for simultaneous Multi operation.

R410A				Micro Inverter			
Set model name				FDE100VSAPVH	FDE125VSAPVH	FDE140VSAPVH	FDE140VSATVH
				Twin			Triple
Indoor unit				FDE50VH x 2	FDE60VH x 2	FDE71VH x 2	FDE50VH x 3
Outdoor unit				FDC100VSA	FDC125VSA	FDC140VSA	FDC140VSA
Power source				3 Phase 380-415V, 50Hz / 380V, 60Hz			
Nominal cooling capacity (Min - Max)			kW	10.0 (4.0 - 11.2)	12.5 (5.0 - 14.0)	13.6 (5.0 - 14.5)	13.6 (5.0 - 14.5)
Nominal heating capacity (Min - Max)			kW	11.2 (4.0 - 12.5)	14.0 (4.0 - 16.0)	15.5 (4.0 - 16.5)	15.5 (4.0 - 16.5)
Power consumption		Cooling/Heating	kW	3.12 / 2.99	4.16 / 3.54	4.74 / 4.21	4.74 / 4.21
EER/COP		Cooling/Heating		3.21 / 3.75	3.00 / 3.95	2.87 / 3.68	2.87 / 3.68
Inrush current			A	5	5	5	5
Max. current				15	15	15	15
Sound power level*1	Indoor*3	Cooling/Heating	dB(A)	60 / 60	60 / 60	60 / 60	60 / 60
	Outdoor	Cooling/Heating		70 / 70	71 / 71	73 / 73	73 / 73
Sound pressure level*1	Indoor*3	Cooling (P-Hi/Hi/Me/Lo)		46 / 38 / 36 / 31	47 / 41 / 37 / 32	47 / 41 / 37 / 32	46 / 38 / 36 / 31
		Heating (P-Hi/Hi/Me/Lo)		46 / 38 / 36 / 31	47 / 41 / 37 / 32	47 / 41 / 37 / 32	46 / 38 / 36 / 31
	Outdoor	Cooling/Heating		54 / 56	55 / 57	57 / 59	57 / 59
Air flow	Indoor*3	Cooling (P-Hi/Hi/Me/Lo)	m^3/min	13 / 10 / 9 / 7	20 / 16 / 13 / 10	20 / 16 / 13 / 10	13 / 10 / 9 / 7
		Heating (P-Hi/Hi/Me/Lo)		13 / 10 / 9 / 7	20 / 16 / 13 / 10	20 / 16 / 13 / 10	13 / 10 / 9 / 7
	Outdoor	Cooling/Heating		75 / 73	75 / 73	75 / 73	75 / 73
Exterior dimensions	Indoor	HeightxWidthxDepth	mm	210 x 1070 x 690	210 x 1320 x 690		210 x 1070 x 690
	Outdoor			845 x 970 x 370			
Net weight	Indoor		kg	28	33		28
	Outdoor			82			
Ref.piping size	Liquid/Gas		ømm	9.52(3/8") / 15.88(5/8")			
Refrigerant line (one way) length			m	Max.50			
Vertical height differences		Outdoor is higher/lower	m	Max.50 / Max.15			
Outdoor operating temperature range		Cooling	°CDB	-15 to 50*2			
		Heating	°CWB	-20 to 20			
Air filter, Q'ty				Pocket plastic net x 2(Washable)			
Remote control (option)				Wired:RC-EX3D, RC-E5, RC-ES1 Wireless:RCN-E-E3			

The values are for simultaneous Multi operation.

R410A				Micro Inverter				
Set model name				FDE200VSAPVH	FDE250VSAPVH	FDE200VSATVH	FDE200VSADVH	FDE250VSADVH
				Twin		Triple	Double Twin	
Indoor unit				FDE100VH x 2	FDE125VH x 2	FDE71VH x 3	FDE50VH x 4	FDE60VH x 4
Outdoor unit				FDC200VSA	FDC250VSA	FDC200VSA	FDC200VSA	FDC250VSA
Power source				3 Phase 380-415V, 50Hz / 380V, 60Hz				
Nominal cooling capacity (Min - Max)			kW	19.0 (5.2 - 22.4)	24.0 (6.9 - 28.0)	19.0 (5.2 - 22.4)	19.0 (5.2 - 22.4)	24.0 (6.9 - 28.0)
Nominal heating capacity (Min - Max)			kW	22.4 (3.3 - 25.0)	27.0 (5.5 - 31.5)	22.4 (3.3 - 25.0)	22.4 (3.3 - 25.0)	27.0 (5.5 - 31.5)
Power consumption		Cooling/Heating	kW	6.34 / 6.10	8.52 / 7.54	6.33 / 5.94	6.90 / 7.10	8.00 / 7.02
EER/COP		Cooling/Heating		3.00 / 3.67	2.82 / 3.58	3.00 / 3.77	2.75 / 3.15	3.00 / 3.85
Inrush current			A	5	5	5	5	5
Max. current				20	21	20	20	21
Sound power level*1	Indoor*3	Cooling/Heating	dB(A)	64 / 64	64 / 64	60 / 60	60 / 60	60 / 60
	Outdoor	Cooling/Heating		72 / 74	73 / 75	72 / 74	72 / 74	73 / 75
Sound pressure level*1	Indoor*3	Cooling (P-Hi/Hi/Me/Lo)		48 / 43 / 38 / 34	48 / 45 / 40 / 35	47 / 41 / 37 / 32	46 / 38 / 36 / 31	47 / 41 / 37 / 32
		Heating (P-Hi/Hi/Me/Lo)		48 / 43 / 38 / 34	48 / 45 / 40 / 35	47 / 41 / 37 / 32	46 / 38 / 36 / 31	47 / 41 / 37 / 32
	Outdoor	Cooling/Heating		58 / 59	59 / 62	58 / 59	58 / 59	59 / 62
Air flow	Indoor*3	Cooling (P-Hi/Hi/Me/Lo)	m^3/min	32 / 26 / 21 / 16.5	32 / 29 / 23 / 17	20 / 16 / 13 / 10	13 / 10 / 9 / 7	20 / 16 / 13 / 10
		Heating (P-Hi/Hi/Me/Lo)		32 / 26 / 21 / 16.5	32 / 29 / 23 / 17	20 / 16 / 13 / 10	13 / 10 / 9 / 7	20 / 16 / 13 / 10
	Outdoor	Cooling/Heating		135 / 135	143 / 151	135 / 135	135 / 135	143 / 151
Exterior dimensions	Indoor	HeightxWidthxDepth	mm	250 x 1620 x 690		210 x 1320 x 690	210 x 1070 x 690	210 x 1320 x 690
	Outdoor			1300 x 970 x 370	1505 x 970 x 370	1300 x 970 x 370	1300 x 970 x 370	1505 x 970 x 370
Net weight	Indoor		kg	43		33	28	33
	Outdoor			115	143	115	115	143
Ref.piping size	Liquid/Gas		ømm	9.52(3/8") / 22.22(7/8")	12.7(1/2") / 22.22(7/8")	9.52(3/8") / 22.22(7/8")	9.52(3/8") / 22.22(7/8")	12.7(1/2") / 22.22(7/8")
Refrigerant line (one way) length			m	Max.70				
Vertical height differences		Outdoor is higher/lower	m	Max.30 / Max.15				
Outdoor operating temperature range		Cooling	°CDB	-15 to 50*2				
		Heating	°CWB	-15 to 20				
Air filter, Q'ty				Pocket plastic net x 2(Washable)				
Remote control (option)				Wired:RC-EX3D, RC-E5, RC-ES1 Wireless:RCN-E-E3				

NOTES:

The data are measured under the following conditions(R32 : ISO-T1, -H1 / R410A : ISO-T1).
Cooling:Indoor temp. of 27°CDB, 19°CWB, and outdoor temp. of 35°CDB. Heating:Indoor temp. of 20°CDB, and outdoor temp. of 7°CDB, 6°CWB.
*1 : Indicates the value in an anechoic chamber. During operation these values are somewhat higher due to ambient conditions.
*2 : If a cooling operation is conducted when the outdoor air temperature is –5°C or lower, the outdoor unit should be installed at a place where it is not influenced by natural wind. If wind blows, the low pressure will drop and compressor frequency will increase, this will cause the capacity to drop and may cause the unit to break down.
*3 : The values are for one indoor unit operation. (Multi system only)

R32				Standard Inverter			
Set model name				FDE71VNPWVH	FDE90VNPWVH	FDE100VNPWVH	FDE125VNPWVH
Indoor unit				FDE71VH	FDE100VH	FDE100VH	FDE125VH
Outdoor unit				FDC71VNP-W	FDC90VNP-W	FDC100VNP-W	FDC125VNP-W
Power source				1 Phase 220-240V, 50Hz / 220V, 60Hz			
Nominal cooling capacity (Min - Max)			kW	7.1 (1.5 - 7.3)	9.0 (2.1 - 9.5)	10.0 (2.1 - 10.2)	12.1 (5.0 - 12.1)
Nominal heating capacity (Min - Max)			kW	7.1 (1.1 - 7.3)	9.0 (1.7 - 9.5)	10.0 (1.7 - 10.4)	12.1 (4.0 - 13.3)
Power consumption		Cooling/Heating	kW	2.41 / 1.96	2.38 / 1.99	3.00 / 2.36	3.88 / 3.30
EER/COP		Cooling/Heating		2.95 / 3.62	3.78 / 4.52	3.33 / 4.24	3.12 / 3.67
Inrush current			A	5	5	5	5
Max. current				15.8	19	19	18
Sound power level*1	Indoor	Cooling/Heating	dB(A)	60 / 60	64 / 64	64 / 64	64 / 64
	Outdoor	Cooling/Heating		67 / 67	67 / 66	68 / 67	73 / 72
Sound pressure level*1	Indoor	Cooling (P-Hi/Hi/Me/Lo)		47 / 41 / 37 / 32	48 / 43 / 38 / 34	48 / 43 / 38 / 34	48 / 45 / 40 / 35
		Heating (P-Hi/Hi/Me/Lo)		47 / 41 / 37 / 32	48 / 43 / 38 / 34	48 / 43 / 38 / 34	48 / 45 / 40 / 35
	Outdoor	Cooling/Heating		54 / 54	55 / 53	56 / 54	57 / 57
Air flow	Indoor	Cooling (P-Hi/Hi/Me/Lo)	m^3/min	20 / 16 / 13 / 10	32 / 26 / 21 / 16.5	32 / 26 / 21 / 16.5	32 / 29 / 23 /17
		Heating (P-Hi/Hi/Me/Lo)		20 / 16 / 13 / 10	32 / 26 / 21 / 16.5	32 / 26 / 21 / 16.5	32 / 29 / 23 /17
	Outdoor	Cooling/Heating		42 / 42	59 / 55	63 / 55	75 / 79
Exterior dimensions	Indoor	HeightxWidthxDepth	mm	210 x 1320 x 690	250 x 1620 x 690		
	Outdoor			640 x 800(+71) x 290	750 x 880(+88) x 340		845 x 970 x 370
Net weight	Indoor		kg	33	43		
	Outdoor			45	57		73
Ref.piping size	Liquid/Gas		ømm	6.35(1/4") / 12.7(1/2")	6.35(1/4") / 15.88(5/8")		9.52(3/8") / 15.88(5/8")
Refrigerant line (one way) length			m	Max.30			
Vertical height differences		Outdoor is higher/lower	m	Max.20 / Max.20			
Outdoor operating temperature range		Cooling	°CDB	-15 to 46*2			
		Heating	°CWB	-15 to 20			
Air filter, Q'ty				Pocket Plastic net x2(Washable)			
Remote control (option)				Wired:RC-EX3D, RC-E5, RC-ES1 Wireless:RCN-E-E3			

FDF

Intdoor Unit

Floor Standing



FDF 71/100/125/140

*The remote control for the FDF-VD series will be RC-E5 type remote.



Energy Saving

Home Leave

Hi Power

Auto Swing

Weekly Timer

Favourite Setting

R32

R410A

Remote control

Wired



RC-EX3D

New!



RC-ES1 (option)

Wireless



RCN-KIT4-E2 (option)

*Not all functions available with all remote control options.

High Efficiency

Energy efficiency is improved by New heat exchanger design (In case of Hyper INV).

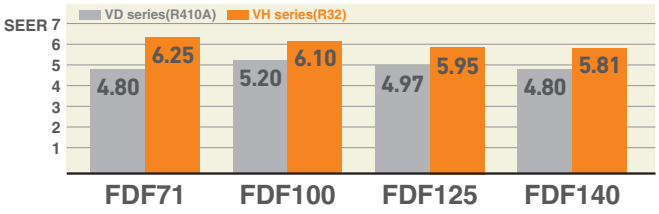

Wide and Powerful Air Flow

Wide and powerful air flow increase your comfort, realizing high efficiency in combination with our highly advanced outdoor units.



Motion Sensor (Option)

Motion sensor is equipped in the ceiling plane or wall plane and detects the presence/absence and activity of humans in a room to improve the comfort and energy saving performance of the unit.



LB-KIT2

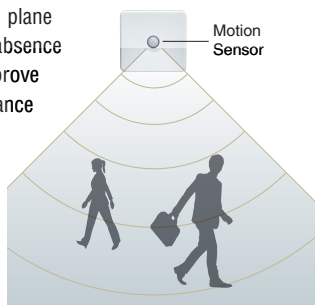

Improved operability and visibility

Equipped with wired remote control as standard equipment.
Various functions can now be controlled. (VH series)





Equipped with a leak detector device

Can now be safely used with the new refrigerant detector that detects leakage of the refrigerant. (VH series)

Remote control will integrate leak detector functions:
Audible and visible alarm





Easy Transportation and Installation Workability

Piping and drain hose connection can be selected out of 6-directions and the selection makes installation workability more effective.
Due to slim design (Depth: 329mm, weight:49kg), easy transportation and installation are realized.

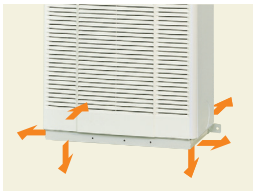

Easy Maintenance

The surface of heat exchanger can be appeared only removing the front panel. Easy cleaning of heat exchanger is possible.

OUTDOOR UNIT

		Hyper Inverter	
FDC	R32	71VNX-W	100-140VN(S)X-W
	R410A	–	100-140VN(S)X
model			
Chargeless		30m	
Height x Width x Depth (mm)		750 × 880(+88) × 340	1300 × 970 × 370

		Micro Inverter			Standard Inverter	
FDC	R32	100-140VN(S)A-W	–	200•250•280VSA-W	71VNP-W	90•100VNP-W
	R410A	100-140VN(S)A	200VSA	250VSA	–	–
model						
Chargeless		30m			15m	
Height x Width x Depth (mm)		845 × 970 × 370	1300 × 970 × 370	1505 × 970 × 370	640 × 800(+71) × 290	750 × 880(+88) × 340

DIMENSIONS (Unit:mm) - FDF -

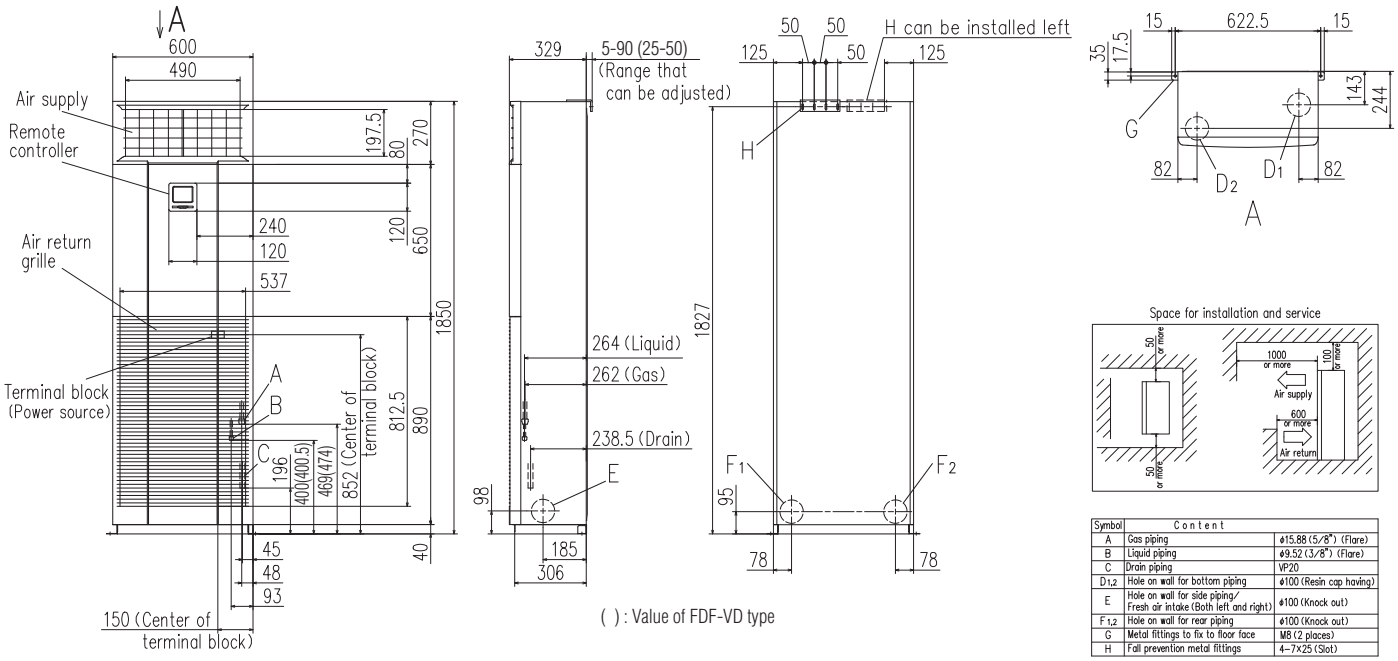

( ) : Value of FDF-VD type

Symbol	Content	
A	Gas piping	ø15.88 (5/8") (Flare)
B	Liquid piping	ø9.52 (3/8") (Flare)
C	Drain piping	VP20
D1,2	Hole on wall for bottom piping	ø100 (Resin cap having)
E	Hole on wall for side piping/ Fresh air intake (Both left and right)	ø100 (Knock out)
F1,2	Hole on wall for rear piping	ø100 (Knock out)
G	Metal fittings to fix to floor face	M8 (2 places)
H	Fall prevention metal fittings	4-7×25 (Slot)

SPECIFICATIONS - FDF -

R32				Hyper Inverter			
Set model name				FDF71VNXWVH1	FDF100VNXWVH1	FDF125VNXWVH1	FDF140VNXWVH1
Indoor unit				FDF71VH1	FDF100VH1	FDF125VH1	FDF140VH1
Outdoor unit				FDC71VNX-W	FDC100VNX-W	FDC125VNX-W	FDC140VNX-W
Power source				1 Phase 220-240V, 50Hz / 220V, 60Hz			
Nominal cooling capacity (Min - Max)			kW	7.1 (3.2 - 8.0)	10.0 (3.5 - 11.2)	12.5 (3.5 - 14.0)	14.0 (3.5 - 16.0)
Nominal heating capacity (Min - Max)			kW	8.0 (3.6 - 9.0)	11.2 (2.7 - 12.5)	14.0 (2.7 - 17.0)	16.0 (2.7 - 18.0)
Power consumption		Cooling/Heating	kW	1.97 / 2.21	2.66 / 2.94	3.74 / 3.88	4.62 / 4.69
EER/COP		Cooling/Heating		3.61 / 3.62	3.76 / 3.81	3.34 / 3.61	3.03 / 3.41
Inrush current			A	5	5	5	5
Max. current				19.1	25.0	27.0	27.0
Sound power level*1	Indoor	Cooling/Heating	dB(A)	55 / 55	65 / 65	67 / 67	67 / 67
	Outdoor	Cooling/Heating		66 / 66	67 / 67	68 / 70	69 / 71
Sound pressure level*1	Indoor	Cooling (P-Hi/Hi/Me/Lo)		42 / 39 / 35 / 33	53 / 51 / 49 / 44	55 / 51 / 49 / 44	55 / 51 / 49 / 44
		Heating (P-Hi/Hi/Me/Lo)		42 / 39 / 35 / 33	53 / 51 / 49 / 44	55 / 51 / 49 / 44	55 / 51 / 49 / 44
	Outdoor	Cooling/Heating		51 / 51	53 / 51	53 / 54	54 / 54
Air flow	Indoor	Cooling (P-Hi/Hi/Me/Lo)	m^3/min	18 / 16 / 14 / 12	27 / 26 / 23 / 19	29 / 26 / 23 / 19	29 / 26 / 23 / 19
		Heating (P-Hi/Hi/Me/Lo)		18 / 16 / 14 / 12	27 / 26 / 23 / 19	29 / 26 / 23 / 19	29 / 26 / 23 / 19
	Outdoor	Cooling/Heating		60 / 50	100 / 100	100 / 100	100 / 100
Exterior dimensions	Indoor	HeightxWidthxDepth	mm	1850 x 600 x 329			
	Outdoor			750 x 880(+88) x 340	1300 x 970 x 370		
Net weight	Indoor		kg	47	49		
	Outdoor			60	97		
Ref.piping size	Liquid/Gas		ømm	9.52(3/8") / 15.88(5/8")			
Refrigerant line (one way) length			m	Max.50	Min. 3, Max.100		
Vertical height differences		Outdoor is higher/lower	m	Max.30 / Max.15	Max.50 / Max.15		
Outdoor operating temperature range		Cooling	°CDB	-15 to 50*2			
		Heating	°CWB	-20 to 20			
Air filter, Q'ty				Plastic net x 1(Washable)			
Remote control (option)				Wired:RC-EX3D, RC-E5, RC-ES1 Wireless:RCN-KIT4-E2			

R32				Hyper Inverter		
Set model name				FDF100VSXWVH1	FDF125VSXWVH1	FDF140VSXWVH1
Indoor unit				FDF100VH1	FDF125VH1	FDF140VH1
Outdoor unit				FDC100VSX-W	FDC125VSX-W	FDC140VSX-W
Power source				3 Phase 380-415V, 50Hz / 380V, 60Hz		
Nominal cooling capacity (Min - Max)			kW	10.0 (3.5 - 11.2)	12.5 (3.5 - 14.0)	14.0 (3.5 - 16.0)
Nominal heating capacity (Min - Max)			kW	11.2 (2.7 - 16.0)	14.0 (2.7 - 18.0)	16.0 (2.7 - 20.0)
Power consumption		Cooling/Heating	kW	2.66 / 2.95	3.74 / 3.88	4.62 / 4.70
EER/COP		Cooling/Heating		3.76 / 3.80	3.34 / 3.61	3.03 / 3.41
Inrush current			A	5	5	5
Max. current				14.0	14.0	14.0
Sound power level*1	Indoor	Cooling/Heating	dB(A)	65 / 65	67 / 67	67 / 67
	Outdoor	Cooling/Heating		67 / 67	68 / 70	69 / 71
Sound pressure level*1	Indoor	Cooling (P-Hi/Hi/Me/Lo)		53 / 51 / 49 / 44	55 / 51 / 49 / 44	55 / 51 / 49 / 44
		Heating (P-Hi/Hi/Me/Lo)		53 / 51 / 49 / 44	55 / 51 / 49 / 44	55 / 51 / 49 / 44
	Outdoor	Cooling/Heating		53 / 51	53 / 54	54 / 54
Air flow	Indoor	Cooling (P-Hi/Hi/Me/Lo)	m^3/min	27 / 26 / 23 / 19	29 / 26 / 23 / 19	29 / 26 / 23 / 19
		Heating (P-Hi/Hi/Me/Lo)		27 / 26 / 23 / 19	29 / 26 / 23 / 19	29 / 26 / 23 / 19
	Outdoor	Cooling/Heating		100 / 100	100 / 100	100 / 100
Exterior dimensions	Indoor	HeightxWidthxDepth	mm	1850 x 600 x 329		
	Outdoor			1300 x 970 x 370		
Net weight	Indoor		kg	49		
	Outdoor			99		
Ref.piping size	Liquid/Gas		ømm	9.52(3/8") / 15.88(5/8")		
Refrigerant line (one way) length			m	Min. 3, Max.100		
Vertical height differences		Outdoor is higher/lower	m	Max.50 / Max.15		
Outdoor operating temperature range		Cooling	°CDB	-15 to 50*2		
		Heating	°CWB	-20 to 20		
Air filter, Q'ty				Plastic net x 1(washable)		
Remote control (option)				Wired:RC-EX3D, RC-E5, RC-ES1 Wireless:RCN-KIT4-E2		

NOTES:

The data are measured under the following conditions(R32 : ISO-T1, -H1 / R410A : ISO-T1).
Cooling:Indoor temp. of 27°CDB, 19°CWB, and outdoor temp. of 35°CDB. Heating:Indoor temp. of 20°CDB, and outdoor temp. of 7°CDB, 6°CWB.
*1 : Indicates the value in an anechoic chamber. During operation these values are somewhat higher due to ambient conditions.
*2 : If a cooling operation is conducted when the outdoor air temperature is –5°C or lower, the outdoor unit should be installed at a place where it is not influenced by natural wind. If wind blows, the low pressure will drop and compressor frequency will increase, this will cause the capacity to drop and may cause the unit to break down.
*3 : The values are for one indoor unit operation. (Multi system only)

The values are for simultaneous Multi operation.

R32				Hyper Inverter	
Set model name				FDF140VNXWPVH1	FDF140VSXWPVH1
				Twin	
Indoor unit				FDF71VH1 x 2	FDF71VH1 x 2
Outdoor unit				FDC140VNX-W	FDC140VSX-W
Power source				1 Phase 220-240V, 50Hz / 220V, 60Hz	3 Phase 380-415V, 50Hz / 380V, 60Hz
Nominal cooling capacity (Min - Max)			kW	14.0 (3.5 - 16.0)	14.0 (3.5 - 16.0)
Nominal heating capacity (Min - Max)			kW	16.0 (2.7 - 18.0)	16.0 (2.7 - 20.0)
Power consumption		Cooling/Heating	kW	3.78 / 4.26	3.78 / 4.27
EER/COP		Cooling/Heating		3.71 / 3.75	3.71 / 3.75
Inrush current			A	5	5
Max. current				27.0	14.0
Sound power level*1	Indoor*3	Cooling/Heating	dB(A)	55 / 55	55 / 55
	Outdoor	Cooling/Heating		69 / 71	69 / 71
Sound pressure level*1	Indoor*3	Cooling (P-Hi/Hi/Me/Lo)		42 / 39 / 35 / 33	42 / 39 / 35 / 33
		Heating (P-Hi/Hi/Me/Lo)		42 / 39 / 35 / 33	42 / 39 / 35 / 33
	Outdoor	Cooling/Heating		54 / 54	54 / 54
Air flow	Indoor*3	Cooling (P-Hi/Hi/Me/Lo)	m^3/min	18 / 16 / 14 / 12	18 / 16 / 14 / 12
		Heating (P-Hi/Hi/Me/Lo)		18 / 16 / 14 / 12	18 / 16 / 14 / 12
	Outdoor	Cooling/Heating		100 / 100	100 / 100
Exterior dimensions	Indoor	HeightxWidthxDepth	mm	1850 x 600 x 329	
	Outdoor			1300 x 970 x 370	
Net weight	Indoor		kg	47	
	Outdoor			97	99
Ref.piping size	Liquid/Gas		ømm	9.52(3/8") / 15.88(5/8")	
Refrigerant line (one way) length			m	Min. 3, Max.100	
Vertical height differences		Outdoor is higher/lower	m	Max.50 / Max.15	
Outdoor operating temperature range		Cooling	°CDB	-15 to 50*2	
		Heating	°CWB	-20 to 20	
Air filter, Q'ty				Plastic net x 1(Washable)	
Remote control (option)				Wired:RC-EX3D, RC-E5, RC-ES1 Wireless:RCN-KIT4-E2	

R410A				Hyper Inverter		
Set model name				FDF100VNXVD2	FDF125VNXVD	FDF140VNXVD
Indoor unit				FDF100VD2	FDF125VD	FDF140VD
Outdoor unit				FDC100VNX	FDC125VNX	FDC140VNX
Power source				1 Phase 220-240V, 50Hz / 220V, 60Hz		
Nominal cooling capacity (Min - Max)			kW	10.0 (4.0 - 11.2)	12.5 (5.0 - 14.0)	14.0 (5.0 - 16.0)
Nominal heating capacity (Min - Max)			kW	11.2 (4.0 - 12.5)	14.0 (4.0 - 17.0)	16.0 (4.0 - 18.0)
Power consumption		Cooling/Heating	kW	2.83 / 3.04	3.89 / 3.88	4.65 / 4.69
EER/COP		Cooling/Heating		3.53 / 3.68	3.21 / 3.61	3.01 / 3.41
Inrush current			A	5	5	5
Max. current				24	26	26
Sound power level*1	Indoor	Cooling/Heating	dB(A)	65 / 65	73 / 73	73 / 73
	Outdoor	Cooling/Heating		70 / 70	70 / 70	72 / 72
Sound pressure level*1	Indoor	Cooling (P-Hi/Hi/Me/Lo)		54 / 50 / 48 / 44	54 / 50 / 48 / 44	54 / 50 / 48 / 44
		Heating (P-Hi/Hi/Me/Lo)		54 / 50 / 48 / 44	54 / 50 / 48 / 44	54 / 50 / 48 / 44
	Outdoor	Cooling/Heating		48 / 50	48 / 50	49 / 52
Air flow	Indoor	Cooling (P-Hi/Hi/Me/Lo)	m^3/min	29 / 26 / 23 / 19	29 / 26 / 23 / 19	29 / 26 / 23 / 19
		Heating (P-Hi/Hi/Me/Lo)		29 / 26 / 23 / 19	29 / 26 / 23 / 19	29 / 26 / 23 / 19
	Outdoor	Cooling/Heating		100 / 100	100 / 100	100 / 100
Exterior dimensions	Indoor	HeightxWidthxDepth	mm	1850 x 600 x 329		
	Outdoor			1300 x 970 x 370		
Net weight	Indoor		kg	52		
	Outdoor			105		
Ref.piping size	Liquid/Gas		ømm	9.52(3/8") / 15.88(5/8")		
Refrigerant line (one way) length			m	Max.100		
Vertical height differences		Outdoor is higher/lower	m	Max.30 / Max.15		
Outdoor operating temperature range		Cooling	°CDB	-15 to 43*2		
		Heating	°CWB	-20 to 20		
Air filter, Q'ty				Plastic net x 1(Washable)		
Remote control				Wired:RC-E5 (installed) Wireless:RCN-KIT4-E2 (option)		

SPECIFICATIONS - FDF -

R410A				Hyper Inverter		
Set model name				FDF100VSXVD2	FDF125VSXVD	FDF140VSXVD
Indoor unit				FDF100VD2	FDF125VD	FDF140VD
Outdoor unit				FDC100VSX	FDC125VSX	FDC140VSX
Power source				3 Phase 380-415V, 50Hz / 380V, 60Hz		
Nominal cooling capacity (Min - Max)			kW	10.0 (4.0 - 11.2)	12.5 (5.0 - 14.0)	14.0 (5.0 - 16.0)
Nominal heating capacity (Min - Max)			kW	11.2 (4.0 - 16.0)	14.0 (4.0 - 18.0)	16.0 (4.0 - 20.0)
Power consumption		Cooling/Heating	kW	2.83 / 3.04	3.89 / 3.88	4.65 / 4.69
EER/COP		Cooling/Heating		3.53 / 3.68	3.21 / 3.61	3.01 / 3.41
Inrush current			A	5	5	5
Max. current				15	15	15
Sound power level*1	Indoor	Cooling/Heating	dB(A)	65 / 65	73 / 73	73 / 73
	Outdoor	Cooling/Heating		70 / 70	70 / 70	72 / 72
Sound pressure level*1	Indoor	Cooling (P-Hi/Hi/Me/Lo)		54 / 50 / 48 / 44	54 / 50 / 48 / 44	54 / 50 / 48 / 44
		Heating (P-Hi/Hi/Me/Lo)		54 / 50 / 48 / 44	54 / 50 / 48 / 44	54 / 50 / 48 / 44
	Outdoor	Cooling/Heating		48 / 50	48 / 50	49 / 52
Air flow	Indoor	Cooling (P-Hi/Hi/Me/Lo)	m^3/min	29 / 26 / 23 / 19	29 / 26 / 23 / 19	29 / 26 / 23 / 19
		Heating (P-Hi/Hi/Me/Lo)		29 / 26 / 23 / 19	29 / 26 / 23 / 19	29 / 26 / 23 / 19
	Outdoor	Cooling/Heating		100 / 100	100 / 100	100 / 100
Exterior dimensions	Indoor	HeightxWidthxDepth	mm	1850 x 600 x 329		
	Outdoor			1300 x 970 x 370		
Net weight	Indoor		kg	52		
	Outdoor			105		
Ref.piping size	Liquid/Gas		ømm	9.52(3/8") / 15.88(5/8")		
Refrigerant line (one way) length			m	Max.100		
Vertical height differences		Outdoor is higher/lower	m	Max.30 / Max.15		
Outdoor operating temperature range		Cooling	°CDB	-15 to 43*2		
		Heating	°CWB	-20 to 20		
Air filter, Q'ty				Plastic net x 1(Washable)		
Remote control				Wired:RC-E5 (installed) Wireless:RCN-KIT4-E2 (option)		

The values are for simultaneous Multi operation.

R410A				Hyper Inverter	
Set model name				FDF140VNXPVD1	FDF140VSXPVD1
				Twin	
Indoor unit				FDF71VD1 x 2	FDF71VD1 x 2
Outdoor unit				FDC140VNX	FDC140VSX
Power source				1 Phase 220-240V, 50Hz / 220V, 60Hz	3 Phase 380-415V, 50Hz / 380V 60Hz
Nominal cooling capacity (Min - Max)			kW	14.0 (5.0 - 16.0)	14.0 (5.0 - 16.0)
Nominal heating capacity (Min - Max)			kW	16.0 (4.0 - 18.0)	16.0 (4.0 - 20.0)
Power consumption		Cooling/Heating	kW	4.83 / 4.97	4.83/ 4.97
EER/COP		Cooling/Heating		2.90 / 3.22	2.90 / 3.22
Inrush current			A	5	5
Max. current				26	15
Sound power level*1	Indoor*3	Cooling/Heating	dB(A)	61 / 61	61 / 61
	Outdoor	Cooling/Heating		72 / 72	72 / 72
Sound pressure level*1	Indoor*3	Cooling (P-Hi/Hi/Me/Lo)		42 / 39 / 35 / 33	42 / 39 / 35 / 33
		Heating (P-Hi/Hi/Me/Lo)		42 / 39 / 35 / 33	42 / 39 / 35 / 33
	Outdoor	Cooling/Heating		49 / 52	49 / 52
Air flow	Indoor*3	Cooling (P-Hi/Hi/Me/Lo)	m^3/min	18 / 16 / 14 / 12	18 / 16 / 14 / 12
		Heating (P-Hi/Hi/Me/Lo)		18 / 16 / 14 / 12	18 / 16 / 14 / 12
	Outdoor	Cooling/Heating		100 / 100	100 / 100
Exterior dimensions	Indoor	HeightxWidthxDepth	mm	1850 x 600 x 329	
	Outdoor			1300 x 970 x 370	
Net weight	Indoor		kg	49	
	Outdoor			105	
Ref.piping size	Liquid/Gas		ømm	9.52(3/8") / 15.88(5/8")	
Refrigerant line (one way) length			m	Max.100	
Vertical height differences		Outdoor is higher/lower	m	Max.30 / Max.15	
Outdoor operating temperature range		Cooling	°CDB	-15 to 43*2	
		Heating	°CWB	-20 to 20	
Air filter, Q'ty				Plastic net x 1(Washable)	
Remote control				Wired:RC-E5 (installed) Wireless:RCN-KIT4-E2 (option)	

NOTES:

The data are measured under the following conditions(R32 : ISO-T1, -H1 / R410A : ISO-T1).
Cooling:Indoor temp. of 27°CDB, 19°CWB, and outdoor temp. of 35°CDB. Heating:Indoor temp. of 20°CDB, and outdoor temp. of 7°CDB, 6°CWB.
*1 : Indicates the value in an anechoic chamber. During operation these values are somewhat higher due to ambient conditions.
*2 : If a cooling operation is conducted when the outdoor air temperature is –5°C or lower, the outdoor unit should be installed at a place where it is not influenced by natural wind. If wind blows, the low pressure will drop and compressor frequency will increase, this will cause the capacity to drop and may cause the unit to break down.
*3 : The values are for one indoor unit operation. (Multi system only)

R32				Micro Inverter		
Set model name				FDF100VNAWVH1	FDF125VNAWVH1	FDF140VNAWVH1
Indoor unit				FDF100VH1	FDF125VH1	FDF140VH1
Outdoor unit				FDC100VNA-W	FDC125VNA-W	FDC140VNA-W
Power source				1 Phase 220-240V, 50Hz / 220V, 60Hz		
Nominal cooling capacity (Min - Max)			kW	10.0 (4.0 - 11.2)	12.5 (5.0 - 14.0)	13.6 (5.0 - 14.5)
Nominal heating capacity (Min - Max)			kW	11.2 (4.0 - 12.5)	14.0 (4.0 - 16.0)	15.5 (4.0 - 16.5)
Power consumption		Cooling/Heating	kW	3.08 / 2.94	4.65 / 4.10	5.35 / 4.98
EER/COP		Cooling/Heating		3.25 / 3.81	2.69 / 3.42	2.54 / 3.11
Inrush current			A	5	5	5
Max. current				24.0	24.0	24.0
Sound power level*1	Indoor	Cooling/Heating	dB(A)	65 / 65	67 / 67	67 / 67
	Outdoor	Cooling/Heating		69 / 70	71 / 71	72 / 73
Sound pressure level*1	Indoor	Cooling (P-Hi/Hi/Me/Lo)		53 / 51 / 49 / 44	55 / 51 / 49 / 44	55 / 51 / 49 / 44
		Heating (P-Hi/Hi/Me/Lo)		53 / 51 / 49 / 44	55 / 51 / 49 / 44	55 / 51 / 49 / 44
	Outdoor	Cooling/Heating		54 / 55	54 / 56	56 / 58
Air flow	Indoor	Cooling (P-Hi/Hi/Me/Lo)	m^3/min	27 / 26 / 23 / 19	29 / 26 / 23 / 19	29 / 26 / 23 / 19
		Heating (P-Hi/Hi/Me/Lo)		27 / 26 / 23 / 19	29 / 26 / 23 / 19	29 / 26 / 23 / 19
	Outdoor	Cooling/Heating		75 / 73	75 / 73	75 / 73
Exterior dimensions	Indoor	HeightxWidthxDepth	mm	1850 x 600 x 329		
	Outdoor			845 x 970 x 370		
Net weight	Indoor		kg	49		
	Outdoor			77		
Ref.piping size	Liquid/Gas		ømm	9.52(3/8") / 15.88(5/8")		
Refrigerant line (one way) length			m	Max.50		
Vertical height differences		Outdoor is higher/lower	m	Max.50 / Max.15		
Outdoor operating temperature range		Cooling	°CDB	-15 to 50*2		
		Heating	°CWB	-20 to 20		
Air filter, Q'ty				Plastic net x 1(Washable)		
Remote control (option)				Wired:RC-EX3D, RC-E5, RC-ES1 Wireless:RCN-KIT4-E2		

R32				Micro Inverter		
Set model name				FDF100VSAWVH1	FDF125VSAWVH1	FDF140VSAWVH1
Indoor unit				FDF100VH1	FDF125VH1	FDF140VH1
Outdoor unit				FDC100VSA-W	FDC125VSA-W	FDC140VSA-W
Power source				3 Phase 380-415V, 50Hz / 380V, 60Hz		
Nominal cooling capacity (Min - Max)			kW	10.0 (4.0 - 11.2)	12.5 (5.0 - 14.0)	13.6 (5.0 - 14.5)
Nominal heating capacity (Min - Max)			kW	11.2 (4.0 - 12.5)	14.0 (4.0 - 16.0)	15.5 (4.0 - 16.5)
Power consumption		Cooling/Heating	kW	3.09 / 2.94	4.65 / 4.09	5.42 / 4.98
EER/COP		Cooling/Heating		3.25 / 3.81	2.69 / 3.42	2.51 / 3.11
Inrush current			A	5	5	5
Max. current				15.0	15.0	15.0
Sound power level*1	Indoor	Cooling/Heating	dB(A)	65 / 65	67 / 67	67 / 67
	Outdoor	Cooling/Heating		69 / 70	71 / 71	72 / 73
Sound pressure level*1	Indoor	Cooling (P-Hi/Hi/Me/Lo)		53 / 51 / 49 / 44	55 / 51 / 49 / 44	55 / 51 / 49 / 44
		Heating (P-Hi/Hi/Me/Lo)		53 / 51 / 49 / 44	55 / 51 / 49 / 44	55 / 51 / 49 / 44
	Outdoor	Cooling/Heating		54 / 55	54 / 56	56 / 58
Air flow	Indoor	Cooling (P-Hi/Hi/Me/Lo)	m^3/min	27 / 26 / 23 / 19	29 / 26 / 23 / 19	29 / 26 / 23 / 19
		Heating (P-Hi/Hi/Me/Lo)		27 / 26 / 23 / 19	29 / 26 / 23 / 19	29 / 26 / 23 / 19
	Outdoor	Cooling/Heating		75 / 73	75 / 73	75 / 73
Exterior dimensions	Indoor	HeightxWidthxDepth	mm	1850 x 600 x 329		
	Outdoor			845 x 970 x 370		
Net weight	Indoor		kg	49		
	Outdoor			78		
Ref.piping size	Liquid/Gas		ømm	9.52(3/8") / 15.88(5/8")		
Refrigerant line (one way) length			m	Max.50		
Vertical height differences		Outdoor is higher/lower	m	Max.50 / Max.15		
Outdoor operating temperature range		Cooling	°CDB	-15 to 50*2		
		Heating	°CWB	-20 to 20		
Air filter, Q'ty				Plastic net x 1(Washable)		
Remote control (option)				Wired:RC-EX3D, RC-E5, RC-ES1 Wireless:RCN-KIT4-E2		

SPECIFICATIONS - FDF -

The values are for simultaneous Multi operation.

R32				Micro Inverter				
Set model name				FDF140VNAWPVH1	FDF140VSAWPVH1	FDF200VSAWPVH1	FDF250VSAWPVH1	FDF280VSAWPVH1
				Twin				
Indoor unit				FDF71VH1 x 2	FDF71VH1 x 2	FDF100VH1 x 2	FDF125VH1 x 2	FDF140VH1 x 2
Outdoor unit				FDC140VNA-W	FDC140VSA-W	FDC200VSA-W	FDC250VSA-W	FDC280VSA-W
Power source				1 Phase 220-240V, 50Hz / 220V, 60Hz	3 Phase 380-415V, 50Hz / 380V, 60Hz			
Nominal cooling capacity (Min - Max)			kW	13.6 (5.0 - 14.5)	13.6 (5.0 - 14.5)	20.0 (6.8 - 22.4)	25.0 (6.8 - 28.0)	27.0 (7.5 - 31.5)
Nominal heating capacity (Min - Max)			kW	15.5 (4.0 - 16.5)	15.5 (4.0 - 16.5)	22.4 (6.6 - 25.0)	28.0 (5.7 - 31.5)	30.0 (6.3 - 33.5)
Power consumption		Cooling/Heating	kW	4.46 / 4.49	4.58 / 4.49	6.71 / 6.06	9.54 / 8.37	10.93 / 9.47
EER/COP		Cooling/Heating		3.05 / 3.46	3.05 / 3.46	2.98 / 3.69	2.62 / 3.35	2.47 / 3.17
Inrush current			A	5	5	5	5	5
Max. current				24.0	15.0	19.0	20.0	20.0
Sound power level*1	Indoor*3	Cooling/Heating	dB(A)	55 / 55	55 / 55	65 / 65	67 / 67	67 / 67
	Outdoor	Cooling/Heating		72 / 73	72 / 73	72 / 74	73 / 75	75 / 77
Sound pressure level*1	Indoor*3	Cooling (P-Hi/Hi/Me/Lo)		42 / 39 / 35 / 33	42 / 39 / 35 / 33	53 / 51 / 49 / 44	55 / 51 / 49 / 44	55 / 51 / 49 / 44
		Heating (P-Hi/Hi/Me/Lo)		42 / 39 / 35 / 33	42 / 39 / 35 / 33	53 / 51 / 49 / 44	55 / 51 / 49 / 44	55 / 51 / 49 / 44
	Outdoor	Cooling/Heating		56 / 58	56 / 58	58 / 59	58 / 62	61 / 63
Air flow	Indoor*3	Cooling (P-Hi/Hi/Me/Lo)		18 / 16 / 14 / 12	18 / 16 / 14 / 12	27 / 26 / 23 / 19	29 / 26 / 23 / 19	29 / 26 / 23 / 19
		Heating (P-Hi/Hi/Me/Lo)	m^3/min	18 / 16 / 14 / 12	18 / 16 / 14 / 12	27 / 26 / 23 / 19	29 / 26 / 23 / 19	29 / 26 / 23 / 19
	Outdoor	Cooling/Heating		75 / 73	75 / 73	148 / 134	148 / 153	136 / 140
Exterior dimensions	Indoor	HeightxWidthxDepth	mm	1850 x 600 x 329				
	Outdoor			845 x 970 x 370		1505 x 970 x 370		
Net weight	Indoor		kg	47		49		
	Outdoor			77	78	144	145	155
Ref.piping size	Liquid/Gas		ømm	9.52(3/8") / 15.88(5/8")		9.52(3/8") / 22.22(7/8")	12.7(1/2") / 22.22(7/8")	
Refrigerant line (one way) length			m	Max.50		Max.70		Max.60
Vertical height differences		Outdoor is higher/lower	m	Max.50 / Max.15		Max.50*4 / Max.15		
Outdoor operating temperature range		Cooling	°CDB	-15 to 50*2				
		Heating	°CWB	-20 to 20				
Air filter, Q'ty				Plastic net x 1(Washable)				
Remote control (option)				Wired:RC-EX3D, RC-E5, RC-ES1 Wireless:RCN-KIT4-E2				

R410A				Micro Inverter		
Set model name				FDF100VNAVD2	FDF125VNAVD	FDF140VNAVD
Indoor unit				FDF100VD2	FDF125VD	FDF140VD
Outdoor unit				FDC100VNA	FDC125VNA	FDC140VNA
Power source				1 Phase 220-240V, 50Hz / 220V, 60Hz		
Nominal cooling capacity (Min - Max)			kW	10.0 (4.0 - 11.2)	12.5 (5.0 - 13.0)	13.0 (5.0 - 13.0)
Nominal heating capacity (Min - Max)			kW	11.2 (4.0 - 12.5)	14.0 (4.0 - 16.0)	15.5 (4.0 - 16.5)
Power consumption		Cooling/Heating	kW	3.12 / 2.94	4.65 / 4.14	5.02 / 4.98
EER/COP		Cooling/Heating		3.21 / 3.81	2.69 / 3.38	2.59 / 3.11
Inrush current			A	5	5	5
Max. current				24	24	24
Sound power level*1	Indoor	Cooling/Heating	dB(A)	65 / 65	73 / 73	73 / 73
	Outdoor	Cooling/Heating		70 / 70	71 / 71	73 / 73
Sound pressure level*1	Indoor	Cooling (P-Hi/Hi/Me/Lo)		54 / 50 / 48 / 44	54 / 50 / 48 / 44	54 / 50 / 48 / 44
		Heating (P-Hi/Hi/Me/Lo)		54 / 50 / 48 / 44	54 / 50 / 48 / 44	54 / 50 / 48 / 44
	Outdoor	Cooling/Heating		54 / 56	55 / 57	57 / 59
Air flow	Indoor	Cooling (P-Hi/Hi/Me/Lo)		29 / 26 / 23 / 19	29 / 26 / 23 / 19	29 / 26 / 23 / 19
		Heating (P-Hi/Hi/Me/Lo)	m^3/min	29 / 26 / 23 / 19	29 / 26 / 23 / 19	29 / 26 / 23 / 19
	Outdoor	Cooling/Heating		75 / 73	75 / 73	75 / 73
Exterior dimensions	Indoor	HeightxWidthxDepth	mm	1850 x 600 x 329		
	Outdoor			845 x 970 x 370		
Net weight	Indoor		kg	52		
	Outdoor			80		
Ref.piping size	Liquid/Gas		ømm	9.52(3/8") / 15.88(5/8")		
Refrigerant line (one way) length			m	Max.50		
Vertical height differences		Outdoor is higher/lower	m	Max.50 / Max.15		
Outdoor operating temperature range		Cooling	°CDB	-15 to 50*2		
		Heating	°CWB	-20 to 20		
Air filter, Q'ty				Plastic net x 1(Washable)		
Remote control				Wired:RC-E5 (installed) Wireless:RCN-KIT4-E2 (option)		

NOTES:

The data are measured under the following conditions(R32 : ISO-T1, -H1 / R410A : ISO-T1).
Cooling:Indoor temp. of 27°CDB, 19°CWB, and outdoor temp. of 35°CDB. Heating:Indoor temp. of 20°CDB, and outdoor temp. of 7°CDB, 6°CWB.
*1 : Indicates the value in an anechoic chamber. During operation these values are somewhat higher due to ambient conditions.
*2 : If a cooling operation is conducted when the outdoor air temperature is –5°C or lower, the outdoor unit should be installed at a place where it is not influenced by natural wind. If wind blows, the low pressure will drop and compressor frequency will increase, this will cause the capacity to drop and may cause the unit to break down.
*3 : The values are for one indoor unit operation. (Multi system only)
*4 : In case of following conditions:Max.50m(Outdoor unit is higher & Outdoor temperature ≦ 43°C), Max.30m(Outdoor unit is higher & Outdoor temperature > 43°C)

R410A				Micro Inverter		
Set model name				FDF100VSAVD2	FDF125VSAVD	FDF140VSAVD
Indoor unit				FDF100VD2	FDF125VD	FDF140VD
Outdoor unit				FDC100VSA	FDC125VSA	FDC140VSA
Power source				3 Phase 380-415V, 50Hz / 380V, 60Hz		
Nominal cooling capacity (Min - Max)			kW	10.0 (4.0 - 11.2)	12.5 (5.0 - 14.0)	13.6 (5.0 - 14.5)
Nominal heating capacity (Min - Max)			kW	11.2 (4.0 - 12.5)	14.0 (4.0 - 16.0)	15.5 (4.0 - 16.5)
Power consumption		Cooling/Heating	kW	3.12 / 2.94	4.65/ 4.14	5.42 / 4.98
EER/COP		Cooling/Heating		3.21 / 3.81	2.69 / 3.38	2.51 / 3.11
Inrush current			A	5	5	5
Max. current				15	15	15
Sound power level*1	Indoor	Cooling/Heating	dB(A)	65 / 65	73 / 73	73 / 73
	Outdoor	Cooling/Heating		70 / 70	71 / 71	73 / 73
Sound pressure level*1	Indoor	Cooling (P-Hi/Hi/Me/Lo)		54 / 50 / 48 / 44	54 / 50 / 48 / 44	54 / 50 / 48 / 44
		Heating (P-Hi/Hi/Me/Lo)		54 / 50 / 48 / 44	54 / 50 / 48 / 44	54 / 50 / 48 / 44
	Outdoor	Cooling/Heating		54 / 56	55 / 57	57 / 59
Air flow	Indoor	Cooling (P-Hi/Hi/Me/Lo)	m^3/min	29 / 26 / 23 / 19	29 / 26 / 23 / 19	29 / 26 / 23 / 19
		Heating (P-Hi/Hi/Me/Lo)		29 / 26 / 23 / 19	29 / 26 / 23 / 19	29 / 26 / 23 / 19
	Outdoor	Cooling/Heating		75 / 73	75 / 73	75 / 73
Exterior dimensions	Indoor	HeightxWidthxDepth	mm	1850 x 600 x 329		
	Outdoor			845 x 970 x 370		
Net weight	Indoor		kg	52		
	Outdoor			82		
Ref.piping size	Liquid/Gas		ømm	9.52(3/8") / 15.88(5/8")		
Refrigerant line (one way) length			m	Max.50		
Vertical height differences		Outdoor is higher/lower	m	Max.50 / Max.15		
Outdoor operating temperature range		Cooling	°CDB	-15 to 50*2		
		Heating	°CWB	-20 to 20		
Air filter, Q'ty				Plastic net x 1(Washable)		
Remote control				Wired:RC-E5 (installed) Wireless:RCN-KIT4-E2 (option)		

The values are for simultaneous Multi operation.

R410A				Micro Inverter			
Set model name				FDF140VNAPVD1	FDF140VSAPVD1	FDF200VSAPVD2	FDF250VSAPVD
				Twin			
Indoor unit				FDF71VD1 x 2	FDF71VD1 x 2	FDF100VD2 x 2	FDF125VD x 2
Outdoor unit				FDC140VNA	FDC140VSA	FDC200VSA	FDC250VSA
Power source				1 Phase 220-240V, 50Hz / 220V, 60Hz	3 Phase 380-415V, 50Hz / 380V, 60Hz		
Nominal cooling capacity (Min - Max)			kW	13.6 (5.0 - 14.5)	13.6 (5.0 - 14.5)	19.0 (5.2 - 22.4)	24.0 (6.9 - 28.0)
Nominal heating capacity (Min - Max)			kW	15.5 (4.0 - 16.5)	15.5 (4.0 - 16.5)	22.4 (3.3 - 25.0)	27.0 (5.5 - 31.5)
Power consumption		Cooling/Heating	kW	5.15 / 4.35	5.15 / 4.35	6.74 / 6.42	9.15 / 8.49
EER/COP		Cooling/Heating		2.64 / 3.56	2.64 / 3.56	2.82 / 3.49	2.62 / 3.18
Inrush current			A	5	5	5	5
Max. current				24	15	20	21
Sound power level*1	Indoor*3	Cooling/Heating	dB(A)	61 / 61	61 / 61	65 / 65	73 / 73
	Outdoor	Cooling/Heating		73 / 73	73 / 73	72 / 74	73 / 75
Sound pressure level*1	Indoor*3	Cooling (P-Hi/Hi/Me/Lo)		42 / 39 / 35 / 33	42 / 39 / 35 / 33	54 / 50 / 48 / 44	54 / 50 / 48 / 44
		Heating (P-Hi/Hi/Me/Lo)		42 / 39 / 35 / 33	42 / 39 / 35 / 33	54 / 50 / 48 / 44	54 / 50 / 48 / 44
	Outdoor	Cooling/Heating		57 / 59	57 / 59	58 / 59	59 / 62
Air flow	Indoor*3	Cooling (P-Hi/Hi/Me/Lo)	m^3/min	18 / 16 / 14 / 12	18 / 16 / 14 / 12	29 / 26 / 23 / 19	29 / 26 / 23 / 19
		Heating (P-Hi/Hi/Me/Lo)		18 / 16 / 14 / 12	18 / 16 / 14 / 12	29 / 26 / 23 / 19	29 / 26 / 23 / 19
	Outdoor	Cooling/Heating		75 / 73	75 / 73	135 / 135	143 / 151
Exterior dimensions	Indoor	HeightxWidthxDepth	mm	1850 x 600 x 329			
	Outdoor			845 x 970 x 370		1300 x 970 x 370	1505 x 970 x 370
Net weight	Indoor		kg	49		52	
	Outdoor			80	82	115	143
Ref.piping size	Liquid/Gas		ømm	9.52(3/8") / 15.88(5/8")		9.52(3/8") / 22.22(7/8")	12.7(1/2") / 22.22(7/8")
Refrigerant line (one way) length			m	Max.50		Max.70	
Vertical height differences		Outdoor is higher/lower	m	Max.50 / Max.15		Max.30 / Max.15	
Outdoor operating temperature range		Cooling	°CDB	-15 to 50*2			
		Heating	°CWB	-20 to 20		-15 to 20	
Air filter, Q'ty				Plastic net x 1(Washable)			
Remote control				Wired:RC-E5 (installed) Wireless:RCN-KIT4-E2 (option)			

SPECIFICATIONS - FDF -

R32				Standard Inverter		
Set model name				FDF71VNPWVH1	FDF90VNPWVH1	FDF100VNPWVH1
Indoor unit				FDF71VH1	FDF100VH1	FDF100VH1
Outdoor unit				FDC71VNP-W	FDC90VNP-W	FDC100VNP-W
Power source				1 Phase 220-240V, 50Hz / 220V, 60Hz		
Nominal cooling capacity (Min - Max)			kW	7.1 (1.5 - 7.3)	9.0 (2.1 - 9.5)	10.0 (2.1 - 10.2)
Nominal heating capacity (Min - Max)			kW	7.1 (1.1 - 7.3)	9.0 (1.7 - 9.5)	10.0 (1.7 - 10.4)
Power consumption		Cooling/Heating	kW	2.51 / 2.02	2.50 / 2.24	3.39 / 2.71
EER/COP		Cooling/Heating		2.82 / 3.51	3.60 / 4.02	2.95 / 3.69
Inrush current			A	5	5	5
Max. current				15.8	19.0	19.0
Sound power level*1	Indoor	Cooling/Heating	dB(A)	55 / 55	65 / 65	65 / 65
	Outdoor	Cooling/Heating		67 / 67	67 / 66	68 / 67
Sound pressure level*1	Indoor	Cooling (P-Hi/Hi/Me/Lo)		42 / 39 / 35 / 33	53 / 51 / 49 / 44	53 / 51 / 49 / 44
		Heating (P-Hi/Hi/Me/Lo)		42 / 39 / 35 / 33	53 / 51 / 49 / 44	53 / 51 / 49 / 44
	Outdoor	Cooling/Heating		54 / 54	55 / 53	56 / 54
Air flow	Indoor	Cooling (P-Hi/Hi/Me/Lo)	m^3/min	18 / 16 / 14 / 12	27 / 26 / 23 / 19	27 / 26 / 23 / 19
		Heating (P-Hi/Hi/Me/Lo)		18 / 16 / 14 / 12	27 / 26 / 23 / 19	27 / 26 / 23 / 19
	Outdoor	Cooling/Heating		42 / 42	59 / 55	63 / 55
Exterior dimensions	Indoor	HeightxWidthxDepth	mm	1850 x 600 x 329		
	Outdoor			640 x 800(+71) x 290	750 x 880(+88) x 340	
Net weight	Indoor		kg	47	49	49
	Outdoor			45	57	
Ref.piping size	Liquid/Gas		ømm	6.35(1/4") / 12.7(1/2")	6.35(1/4") / 15.88(5/8")	
Refrigerant line (one way) length			m	Max.26	Max.25	
Vertical height differences		Outdoor is higher/lower	m	Max.20 / Max.20		
Outdoor operating temperature range		Cooling	°CDB	-15 to 46*2		
		Heating	°CWB	-15 to 20		
Air filter, Q'ty				Plastic net x 1(Washable)		
Remote control (option)				Wired:RC-EX3D, RC-E5, RC-ES1 Wireless:RCN-KIT4-E2		

NOTES:

The data are measured under the following conditions(R32 : ISO-T1, -H1).
Cooling:Indoor temp. of 27˚CDB, 19˚CWB, and outdoor temp. of 35˚CDB. Heating:Indoor temp. of 20˚CDB, and outdoor temp. of 7˚CDB, 6˚CWB.
*1 : Indicates the value in an anechoic chamber. During operation these values are somewhat higher due to ambient conditions.
*2 : If a cooling operation is conducted when the outdoor air temperature is –5˚C or lower, the outdoor unit should be installed at a place where it is not influenced by natural wind. If wind blows, the low pressure will drop and compressor frequency will increase, this will cause the capacity to drop and may cause the unit to break down.

Outdoor Unit Dimensions (Unit:mm)

SRC40ZSX-W1, 50ZSX-W3, 60ZSX-W3

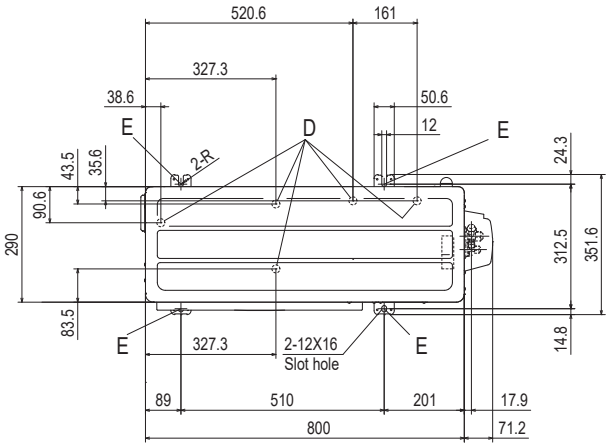

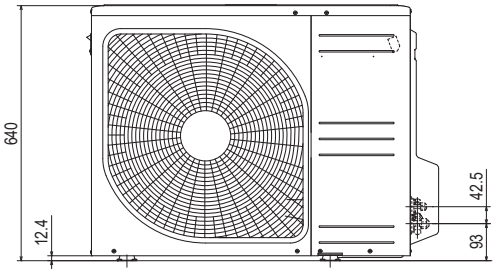

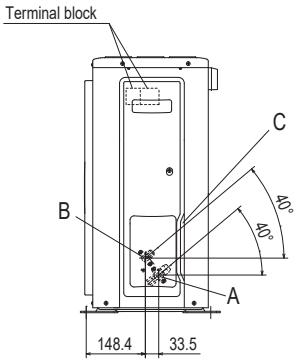

Symbol	Content	
A	Service valve connection (Gas side)	φ12.7(1/2")(Flare)
B	Service valve connection (Liquid side)	φ6.35(1/4")(Flare)
C	Pipe/cable draw-out hole	
D	Drain discharge hole	φ20×5 places
E	Anchor bolt hole	M10-12×4 places

Notes
(1) The unit must not be surrounded by walls on the four sides.
(2) The unit must be fixed with anchor bolts. An anchor bolt must not protrude more than 15mm.
(3) If the unit is installed in the location where there is a possibility of strong winds, place the unit such that the direction of air from the outlet gets perpendicular to the wind direction.
(4) Leave 200mm or more space above the unit.
(5) The wall height on the outlet side should be 1200mm or less.
(6) The model name label is attached on the front side of the unit.

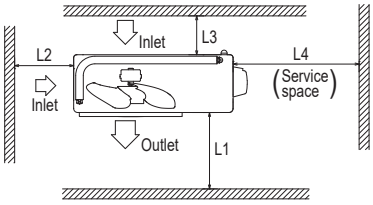

Minimum installation space

Examples installation / Size	I	II	III	IV
L1	Open	280	280	180
L2	100	75	Open	Open
L3	100	80	80	80
L4	250	Open	250	Open

FDC71VNX-W

Symbol	Content	
A	Service valve connection (gas side)	φ15.88 (5/8") (Flare)
B	Service valve connection (liquid side)	φ 9.52 (3/8") (Flare)
C	Pipe/cable draw-out hole	
D	Drain discharge hole	φ 20 × 3places
E	Anchor bolt hole	M10 × 4places

Notes
(1) It must not be surrounded by walls on the four sides.
(2) The unit must be fixed with anchor bolts. An anchor bolt must not protrude more the 15mm.
(3) Where the unit is subject to strong winds, lay it in such a direction that the blower outlet faces perpendicularly to the dominant wind direction.
(4) Leave 1m or more space above the unit.
(5) A wall in front of the blower outlet must not exceed the units height.
(6) The model name label is attached on the lower right corner of the front panel.

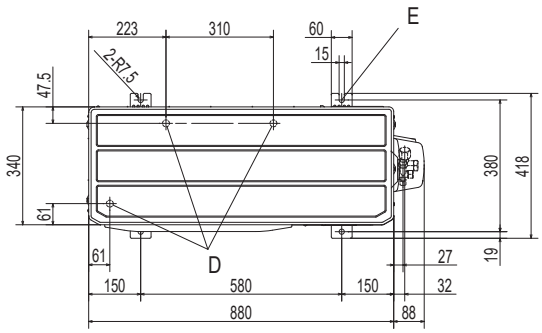

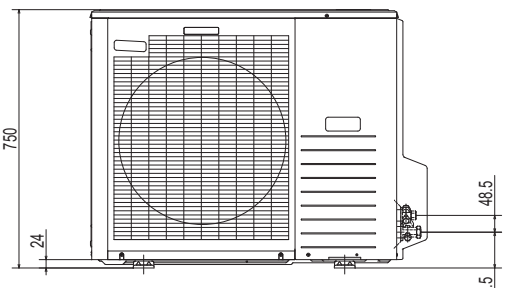

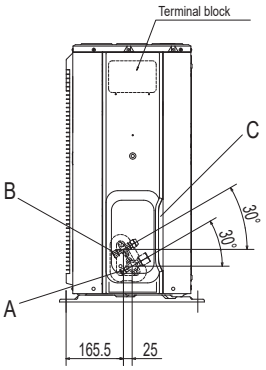

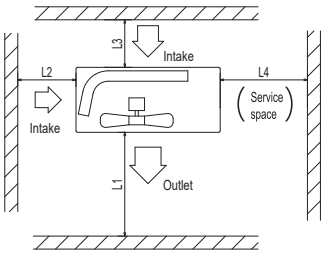

Minimum installation space

Examples of installation / Dimensions	I	II	III
L1	Open	Open	500
L2	300	250	Open
L3	100	150	100
L4	250	250	250

Outdoor Unit Dimensions (Unit:mm)

FDC100VNX-W, 125VNX-W, 140VNX-W, 100VSX-W, 125VSX-W, 140VSX-W

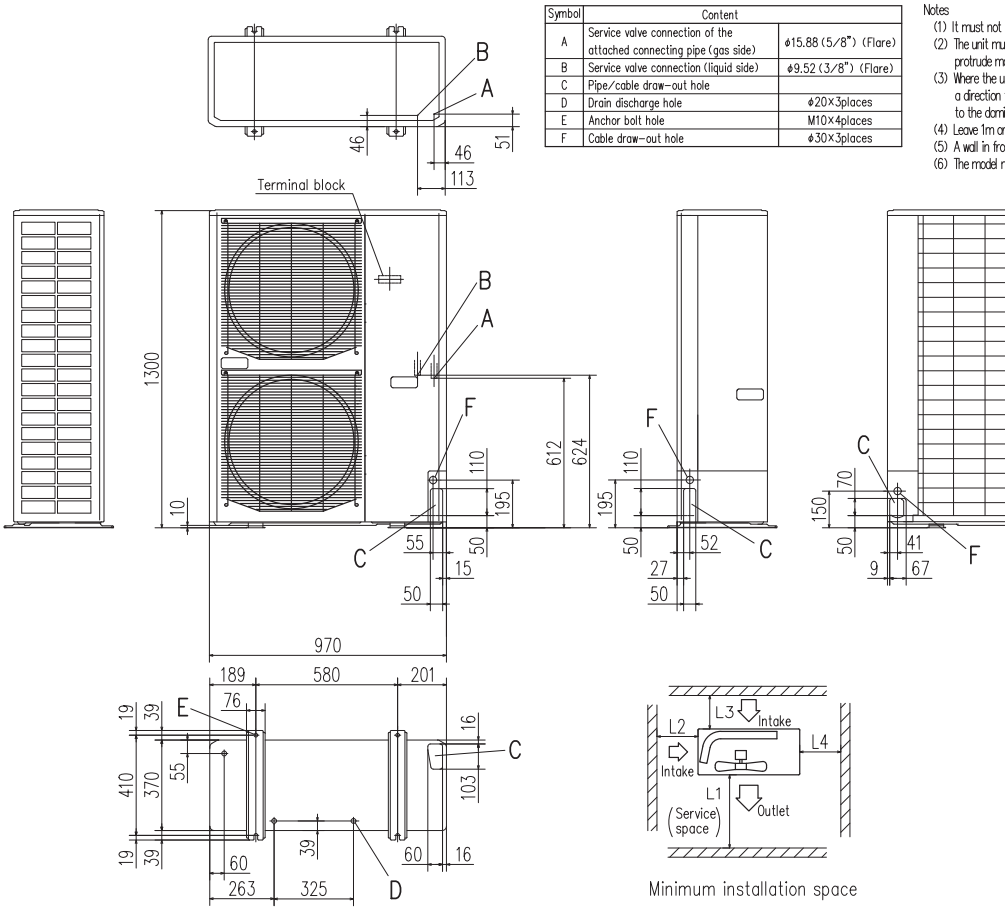

Symbol	Content	
A	Service valve connection of the attached connecting pipe (gas side)	ϕ15.88 (5/8") (Flare)
B	Service valve connection (liquid side)	ϕ9.52 (3/8") (Flare)
C	Pipe/cable draw-out hole	
D	Drain discharge hole	ϕ20×3places
E	Anchor bolt hole	M10×4places
F	Cable draw-out hole	ϕ30×3places

Notes
(1) It must not be surrounded by walls on the four sides.
(2) The unit must be fixed with anchor bolts. An anchor bolt must not protrude more than 15mm.
(3) Where the unit is subject to strong winds, lay it in such a direction that the blower outlet faces perpendicularly to the dominant wind direction.
(4) Leave 1m or more space above the unit.
(5) A wall in front of the blower outlet must not exceed the units height.
(6) The model name label is attached on the lower right corner of the front panel.

Examples of installation / Dimensions	I	II	III
L1	Open	Open	500
L2	300	5	Open
L3	150	300	150
L4	5	5	5

FDC100VNX, 125VNX, 140VNX, 100VSX, 125VSX, 140VSX

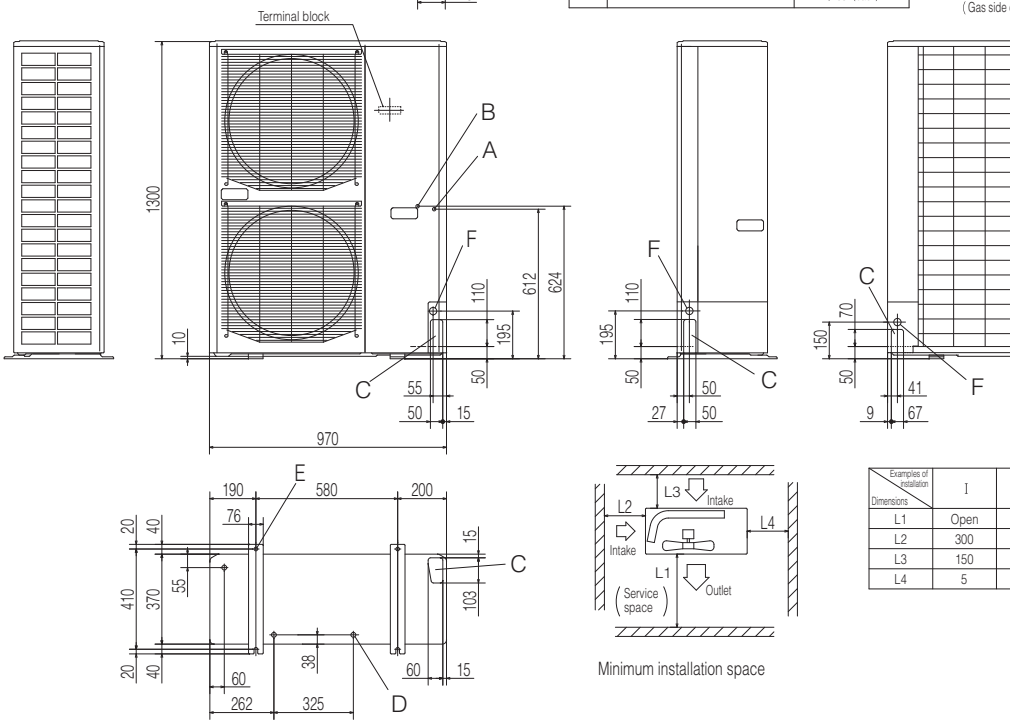

Symbol	Content	
A	Service valve connection of the attached connecting pipe (gas side)	ϕ 15.88 (5/8") (Flare)
B	Service valve connection (liquid side)	ϕ 9.52 (3/8") (Flare)
C	Pipe / cable draw-out hole	
D	Drain discharge hole	ϕ 20 × 3places
E	Anchor bolt hole	M10 × 4places
F	Cable draw-out hole	ϕ 30 (front) ϕ 45 (side) ϕ 50 (back)

Notes
(1) It must not be surrounded by walls on the four sides.
(2) The unit must be fixed with anchor bolts. An anchor bolt must not protrude more than 15mm.
(3) Where the unit is subject to strong winds, lay it in such a direction that the blower outlet faces perpendicularly to the dominant wind direction.
(4) Leave 1m or more space above the unit.
(5) A wall in front of the blower outlet must not exceed the units height.
(6) The model name label is attached on the lower right corner of the front panel.
(7) Connect the Service valve with local pipe by using the pipe of the attachment. (Gas side only)

Examples of installation / Dimensions	I	II	III
L1	Open	Open	500
L2	300	5	Open
L3	150	300	150
L4	5	5	5

FDC100VNA-W, 125VNA-W, 140VNA-W, 100VSA-W, 125VSA-W, 140VSA-W
FDC100VNA, 125VNA, 140VNA, 100VSA, 125VSA, 140VSA

Symbol	Content	
A	Service valve connection (gas side)	ϕ15.88 (5/8") (Flare)
B	Service valve connection (liquid side)	ϕ9.52 (3/8") (Flare)
C	Pipe/cable draw-out hole	
D	Drain discharge hole	ϕ20×3places
E	Anchor bolt hole	M10×4places
F	Cable draw-out hole	ϕ30×3places

Notes
(1) It must not be surrounded by walls on the four sides.
(2) The unit must be fixed with anchor bolts. An anchor bolt must not protrude more the 15mm.
(3) Where the unit is subject to strong winds, lay it in such a direction that the blower outlet faces perpendicularly to the dominant wind direction.
(4) Leave 1m or more space above the unit.
(5) A wall in front of the blower outlet must not exceed the units height.
(6) The model name label is attached on the lower right corner of the front panel.

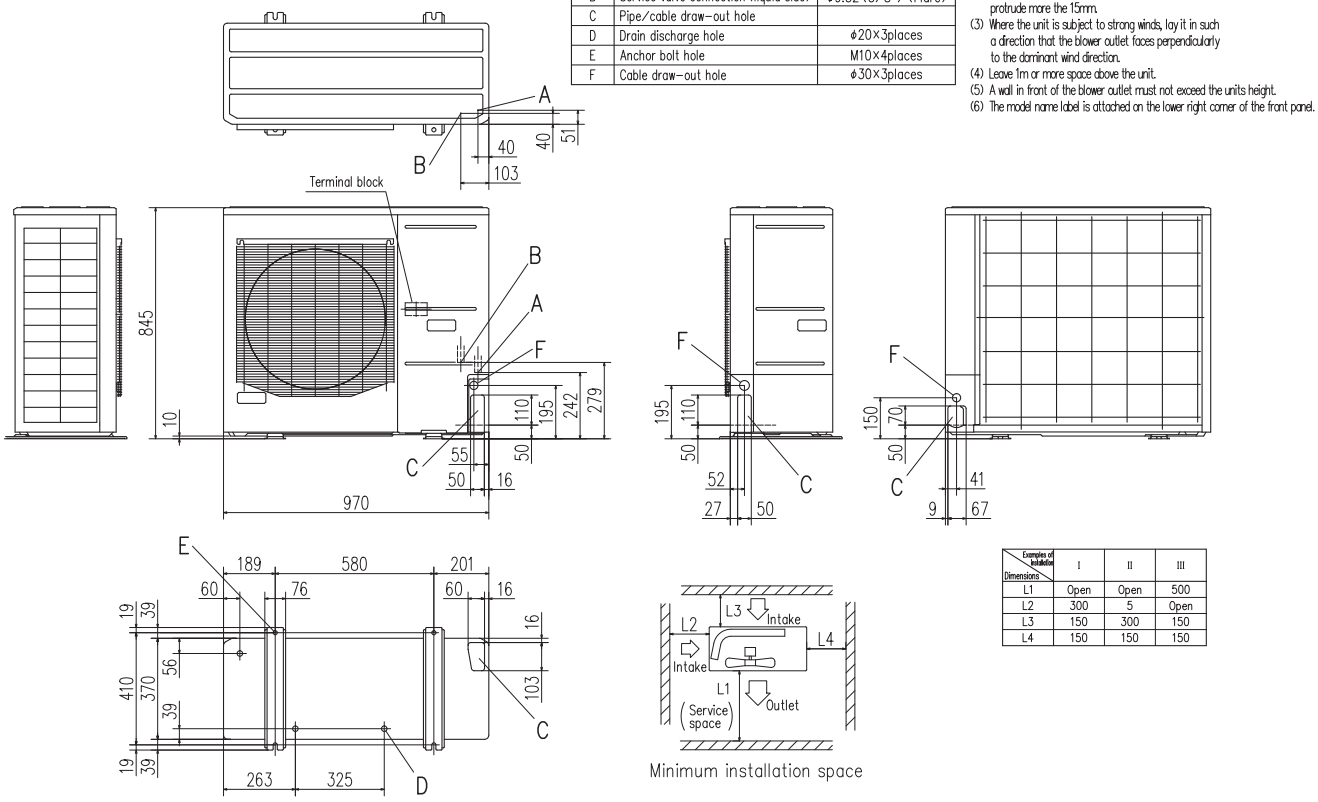

Examples of installation / Dimensions	I	II	III
L1	Open	Open	500
L2	300	5	Open
L3	150	300	150
L4	150	150	150

FDC200VSA

Symbol	Content	
A	Service valve connection of the attached connecting pipe (gas side)	ϕ19.05 (3/4") (Flare)
B	Service valve connection (liquid side)	ϕ9.52 (3/8") (Flare)
C	Pipe/cable draw-out hole	
D	Drain discharge hole	ϕ20×3places
E	Anchor bolt hole	M10×4places
F	Cable draw-out hole	ϕ30 (front) ϕ30 (side) ϕ30 (back)

Notes
(1) It must not be surrounded by walls on the four sides.
(2) The unit must be fixed with anchor bolts. An anchor bolt must not protrude more than 15mm.
(3) Where the unit is subject to strong winds, lay it in such a direction that the blower outlet faces perpendicularly to the dominant wind direction.
(4) Leave 1m or more space above the unit.
(5) A wall in front of the blower outlet must not exceed the units height.
(6) The model name label is attached on the lower right corner of the front panel.
(7) Connect the Service valve with local pipe by using the pipe of the attachment. (Gas side only)
(8) Regarding attaching the pipe of accessories, refer to an attached installation manual.

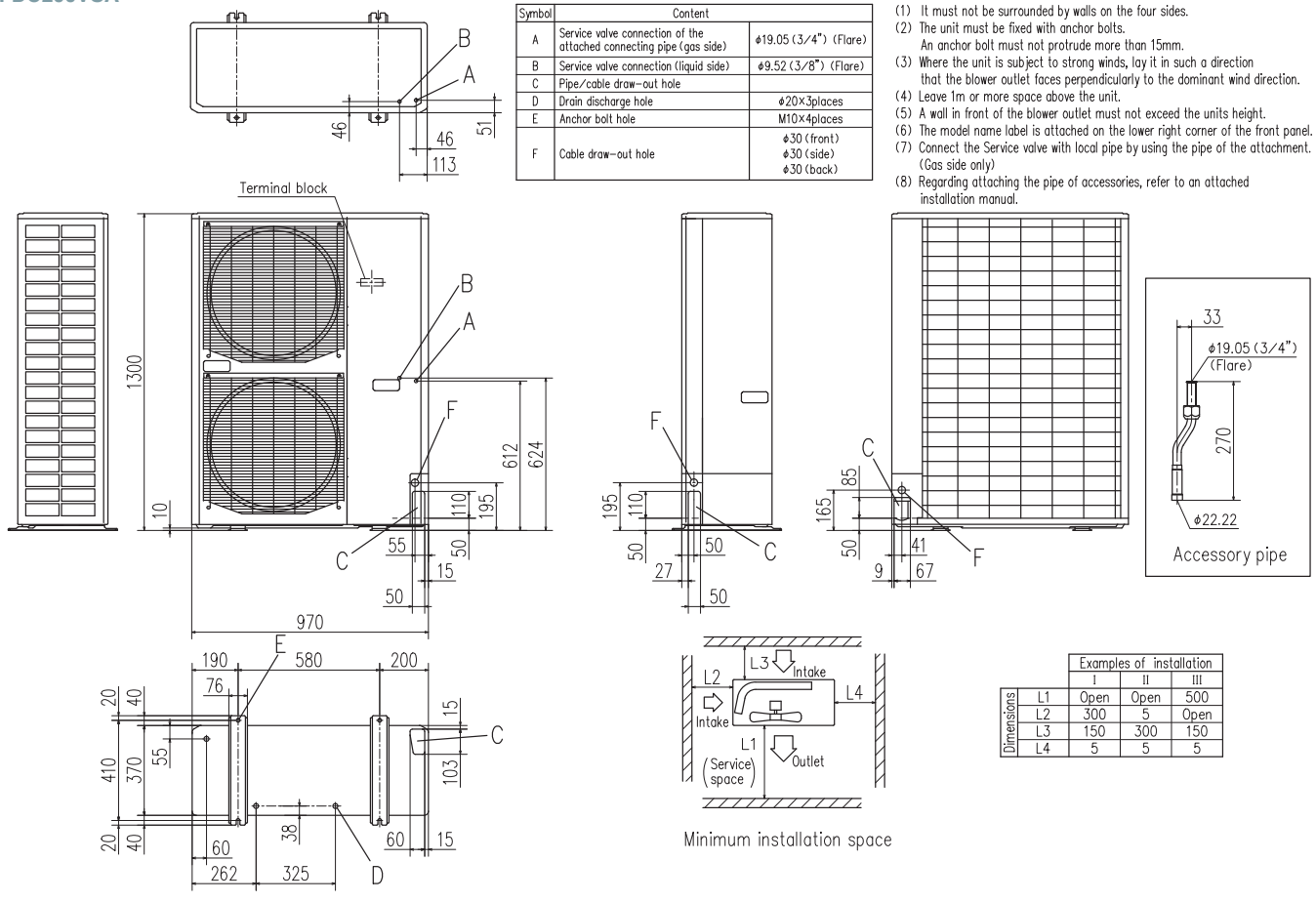

Examples of installation / Dimensions		I	II	III
Dimensions	L1	Open	Open	500
	L2	300	5	Open
	L3	150	300	150
	L4	5	5	5

Outdoor Unit Dimensions (Unit:mm)

FDC200VSA-W, 250VSA-W, FDC280VSA-W
FDC250VSA

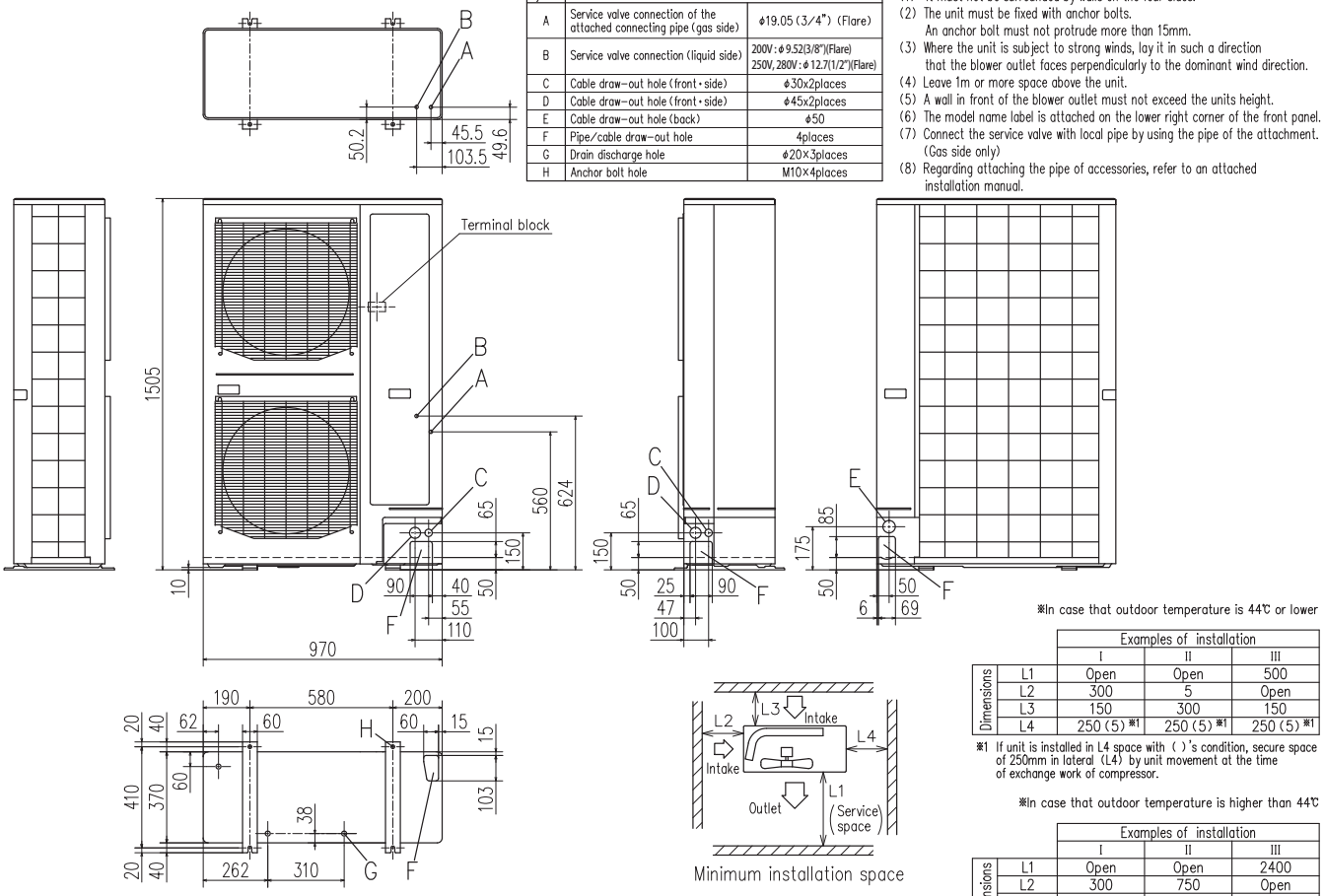

Symbol	Content	
A	Service valve connection of the attached connecting pipe (gas side)	ϕ19.05 (3/4") (Flare)
B	Service valve connection (liquid side)	200V: ϕ9.52(3/8")(Flare) 250V, 280V: ϕ12.7(1/2")(Flare)
C	Cable draw-out hole (front・side)	ϕ30x2places
D	Cable draw-out hole (front・side)	ϕ45x2places
E	Cable draw-out hole (back)	ϕ50
F	Pipe/cable draw-out hole	4places
G	Drain discharge hole	ϕ20×3places
H	Anchor bolt hole	M10×4places

Notes
(1) It must not be surrounded by walls on the four sides.
(2) The unit must be fixed with anchor bolts.
An anchor bolt must not protrude more than 15mm.
(3) Where the unit is subject to strong winds, lay it in such a direction that the blower outlet faces perpendicularly to the dominant wind direction.
(4) Leave 1m or more space above the unit.
(5) A wall in front of the blower outlet must not exceed the units height.
(6) The model name label is attached on the lower right corner of the front panel.
(7) Connect the service valve with local pipe by using the pipe of the attachment. (Gas side only)
(8) Regarding attaching the pipe of accessories, refer to an attached installation manual.

※In case that outdoor temperature is 44℃ or lower

		Examples of installation		
		I	II	III
Dimensions	L1	Open	Open	500
	L2	300	5	Open
	L3	150	300	150
	L4	250 (5) ※1	250 (5) ※1	250 (5) ※1

※1 If unit is installed in L4 space with ( )'s condition, secure space of 250mm in lateral (L4) by unit movement at the time of exchange work of compressor.

※In case that outdoor temperature is higher than 44℃

		Examples of installation		
		I	II	III
Dimensions	L1	Open	Open	2400
	L2	300	750	Open
	L3	300	300	300
	L4	750	300	1500

FDC71VNP-W

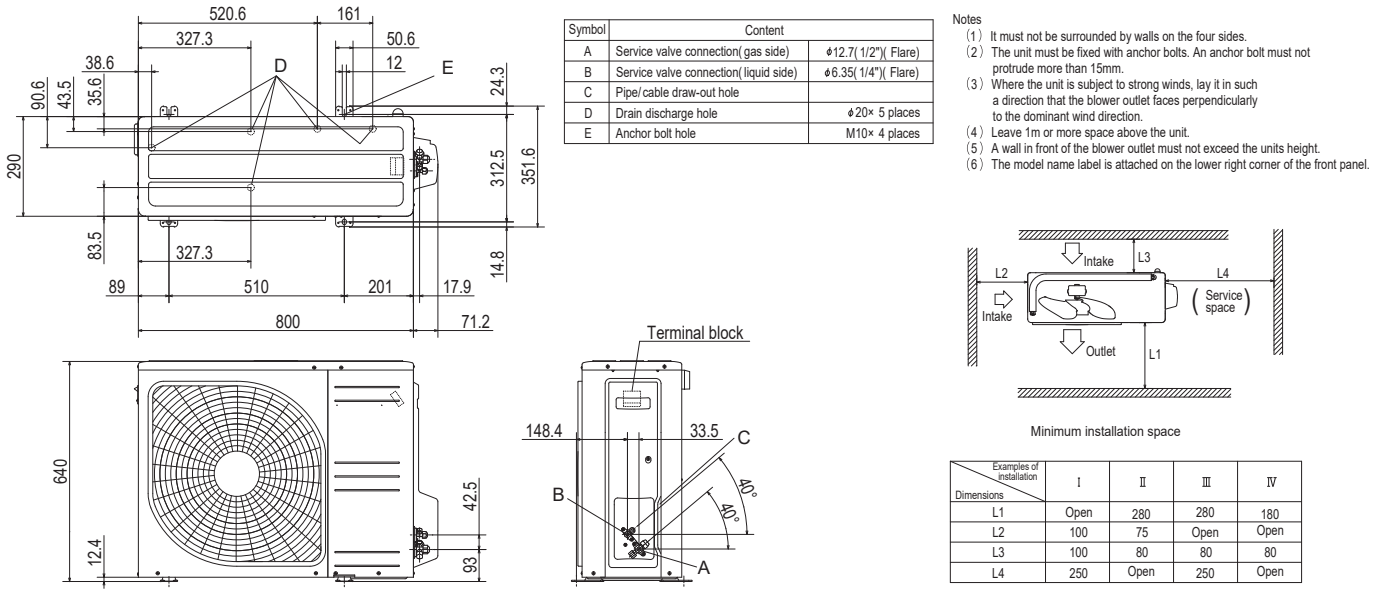

Symbol	Content	
A	Service valve connection(gas side)	ϕ12.7(1/2")(Flare)
B	Service valve connection(liquid side)	ϕ6.35(1/4")(Flare)
C	Pipe/cable draw-out hole	
D	Drain discharge hole	ϕ20× 5 places
E	Anchor bolt hole	M10× 4 places

Notes
(1) It must not be surrounded by walls on the four sides.
(2) The unit must be fixed with anchor bolts. An anchor bolt must not protrude more than 15mm.
(3) Where the unit is subject to strong winds, lay it in such a direction that the blower outlet faces perpendicularly to the dominant wind direction.
(4) Leave 1m or more space above the unit.
(5) A wall in front of the blower outlet must not exceed the units height.
(6) The model name label is attached on the lower right corner of the front panel.

Examples of installation / Dimensions	I	II	III	IV
L1	Open	280	280	180
L2	100	75	Open	Open
L3	100	80	80	80
L4	250	Open	250	Open

FDC90VNP-W, 100VNP-W

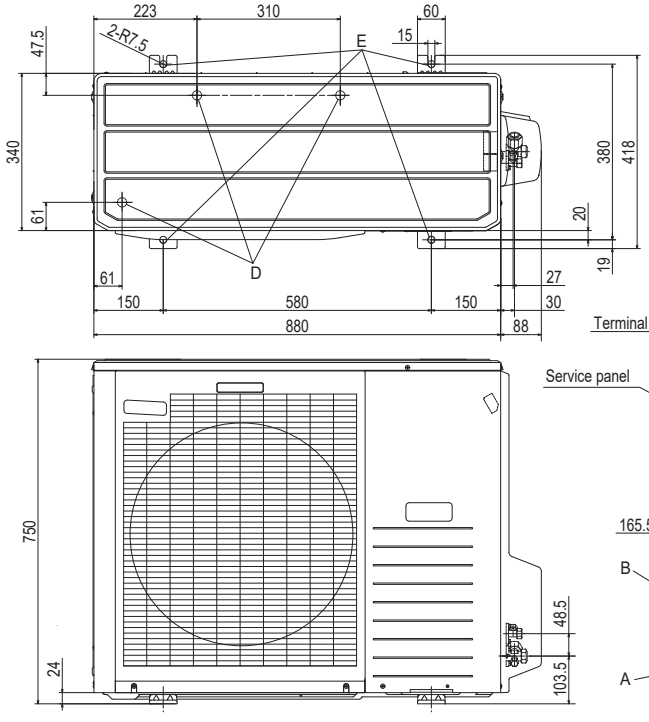

Notes
(1) It must not be surrounded by walls on four sides.
(2) The unit must be fixed with anchor bolts. An anchor bolt must not protrude more than 15mm.
(3) Where the unit is subjected to strong winds, lay it in such a direction that the blower outlet faces perpendicularly to the dominant wind direction.
(4) Leave 1m or more space above the unit.
(5) A wall in front of the blower outlet must not exceed the unit's height.
(6) The model name label is attached on the lower right corner of the front panel.

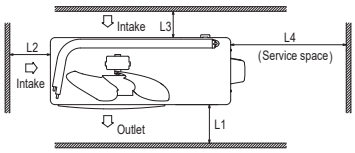

Minimum installation space

Examples of installation / Dimensions	I	II	III
L1	Open	Open	500
L2	300	250	Open
L3	100	150	100
L4	250	250	250

Symbol	Content	
A	Service valve connection(gas side)	ϕ15.88(5/8")(Flare)
B	Service valve connection(liquid side)	ϕ6.35(1/4")(Flare)
C	Pipe/cable draw-out hole	
D	Drain discharge hole	ϕ20 x 3 places
E	Anchor bolt hole	M10 x 4 places

FDC125VNP-W

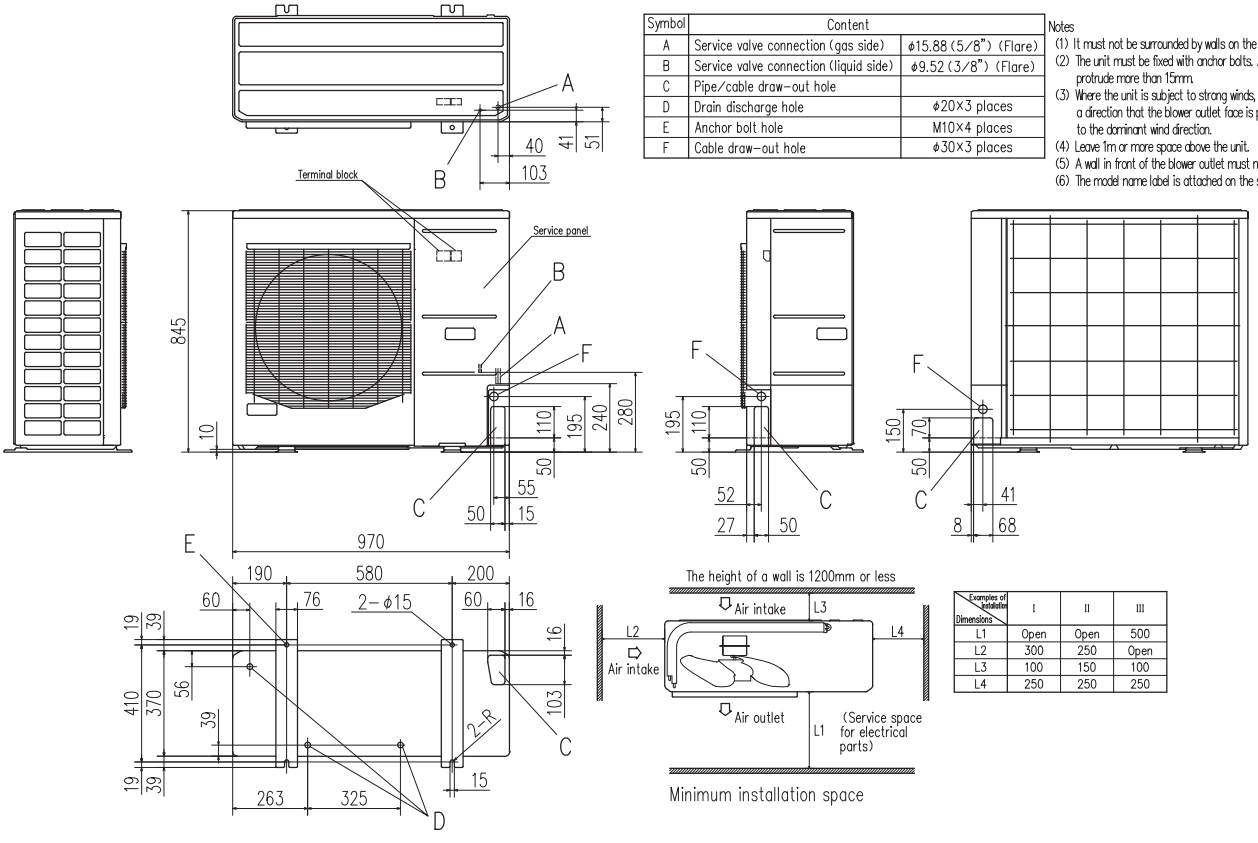

Symbol	Content	
A	Service valve connection (gas side)	ϕ15.88 (5/8") (Flare)
B	Service valve connection (liquid side)	ϕ9.52 (3/8") (Flare)
C	Pipe/cable draw-out hole	
D	Drain discharge hole	ϕ20×3 places
E	Anchor bolt hole	M10×4 places
F	Cable draw-out hole	ϕ30×3 places

Notes
(1) It must not be surrounded by walls on the four sides.
(2) The unit must be fixed with anchor bolts. An anchor bolt must not protrude more than 15mm.
(3) Where the unit is subject to strong winds, lay it in such a direction that the blower outlet face is perpendicular to the dominant wind direction.
(4) Leave 1m or more space above the unit.
(5) A wall in front of the blower outlet must not exceed the units height.
(6) The model name label is attached on the service panel.

Minimum installation space

Examples of installation / Dimensions	I	II	III
L1	Open	Open	500
L2	300	250	Open
L3	100	150	100
L4	250	250	250

Control Systems

Remote Control line up

	Indoor unit	Remote control
Wired	All models	RC-EX3D
		RC-E5
		RC-ES1

	Indoor unit	Remote control
Wireless	FDT	RCN-T-5BW-E2 RCN-T-5BB-E2
	FDTC	RCN-TC-5AW-E3

Indoor unit	Remote control
FDE	RCN-E-E3
FDU,FDUM,FDF	RCN-KIT4-E2

Wired remote control Option

RC-EX3D

Intuitive touch controller with Liquid Crystal Display

User friendly

- The industry's first LCD panel with light tap operation has been introduced
- Simple interface with only three buttons

Operation mode setting screen



The desired operation mode can be selected by simply tapping this button.

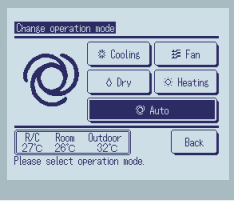

H120 x W120 x D19 mm

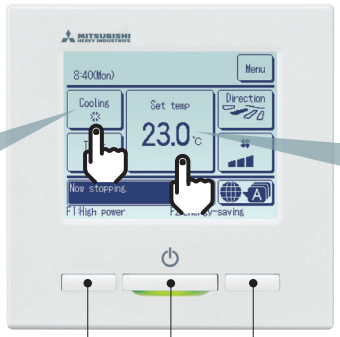

Easy view

- Big LCD with 3.8 inch full dot display
- Back light function
- Multi-language display (9 languages)

Setting temperature screen

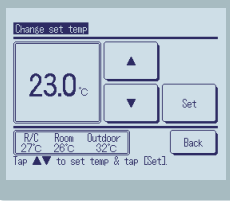

To set your desired temperature, simply tap ▲▼ button.

High power operation

The highest capacity operation (Max 15 minutes)
- Increasing compressor speed
- Increasing air flow volume

Run / Stop

Energy-saving operation

- Changes set temperature. At 28˚C in cooling mode and 22˚C in heating mode, 25˚C in auto mode.
- Adjustment of operation based on outdoor temperature.

Main functions

	Function name	Description
Economy & Timer	Energy-saving operation	Since the capacity is controlled automatically based on the outdoor temperature, energy can be saved without losing comfort.
	Sleep timer	Specify the start and stop time for the operation. The selectable range of setting time is from 30 to 240 minutes (at 10-minute intervals).
	Set temperature auto return	The temperature automatically returns to the previously set temperature.
	Set ON timer by hour	When the predetermined time is reached, the air-conditioner automatically turns on.
	Set OFF timer by hour	When the predetermined time is reached, the air-conditioner automatically turns off.
	Set ON timer by clock	The air-conditioner turns on at the set time.
	Set OFF timer by clock	The air-conditioner turns off at the set time.
	Weekly timer	On or Off timer can be set on a weekly basis.
	Peak-cut timer	Capacity control can be set by using peak cut function on RC-EX3D for better energy saving. Five-step capacity control is available.
	Home leave operation	When the unit is not used for a long period, the room temperature is maintained at a moderate level, avoiding extremely hot or cool temperatures.
Comfort	Big LCD & Touch screen panel	Large 3.8 inch screen has resulted in improved visibility and operability.
	Easy modification of individual flap control	User can visually confirm and set the direction of flap using the visual display on the remote control.
	Automatic fan speed *1	The micro-computer automatically adjusts the airflow effectively to follow the changes of return air temperature.
	Temp increment setting	Temperature increments for changes in the set temperature can be adjusted.
	Silent mode	Set the period of time to operate the Outdoor unit with prioritizing the quietness.

	Function name	Description
Convenience	Function switch *1	The function switch allows user to select and set two functions among available functions .
	Favourite setting *1	Operation mode, set temperature, fan speed and air flow direction automatically adjust to the programmed favourite setting.
	Adjusting Brightness of the operation lamp	The brightness of the background light can be adjusted by 10 stages.
	LCD contrast setting	This function allows user to adjust LCD display contrast.
	High power operation	High Power Mode increases the unit operating ability for 15 minutes to quickly adjust the room temperature to a comfortable level.
	Back light setting	This convenient function allows user to see controls under low light conditions.
	Administrator settings	This function only allows specific individuals to operate the unit.
	Setting temp range	Limited range of setting temperature in the heating or the cooling operation can be selected.
	External Input / Output Function	The external input/output of indoor unit by remote controller can set input/output based on user needs.
	Select the language	Set the language to be displayed on the remote control.
Service	USB connection (mini-B)	This function allows batch input of schedule timer settings and other settings involving a large amount of data.
	Error code display	This function allows user to check information displayed when abnormal function of the unit occurs.
	Operation data display	Displays various types of air-conditioner operation data in real time.
	Contact company display	Address of the service contact is displayed.
	Filter sign	Announces the due time for cleaning of the air filter.
	Static pressure adjustment	Allows user to adjust duct static pressure using the remote control.
	Backup Control	Allows for rotation control, fault backup control, and capacity backup control.

*1 Cannot be used when a centralized control remote is connected.

Wired remote control

option

RC-E5



H120 × W120 × D19 mm

The RC-E5 control enables extensive access to service and maintenance technical data combined with easy to use functions and a clear LCD display.

- Weekly timer function as standard
- Timer operation
- Run hour meters to facilitate maintenance checking
- Room temperature controlled by the remote control sensor
- Adjustable set temperature ranges

Stylish remote control

option

RC-ES1 (wired) New!



H86 × W86 × D17 mm

- Stylish and sophisticated design
- Compact size (86mm×86mm)
- Remote control with Bluetooth® wireless technology

reddot winner 2025

Wireless connection



Remort control with Bluetooth® wireless technology.
Easy set-up of indoor units.
Notifications of abnormal conditions or operational data from the remote control will be sent to your smartphone.

The Bluetooth® word mark and logos are registered trademarks owned by Bluetooth SIG, Inc. and any use of such marks by MITSUBISHI HEAVY INDUSTRIES THERMAL SYSTEMS, LTD. is under license.

Wireless remote control

option

RCN-T-5BW-E2
RCN-T-5BB-E2



For wireless control simply insert the infrared receiver kit on a corner of the panel.

* Wireless remote control is not applicable to the Individual flap control system.

RCN-TC-5AW-E3



RCN-KIT4-E2



RCN-E-E3



Thermistor

option

SC-THB-E3



In case the sensor integrated in the indoor unit or in the remote controller is unable to sense the room temperature correctly, or an individual controller in each room is not required but a temperature sensor is (as when a central control system is in place), install SC-THB-E3 in an adequate location in the room.

Air Handling Unit Interface

AHU-KIT-SP2

The AHU controller will function as an interface between MHI's PAC outdoor units and locally produced heat exchanger for Air Handling Unit (AHU).



- Compact AHU interface for MHI's Split system
- 0-10V/4-20mA capacity control
- Various external I/O
- Modbus connection
- Cascade control
- Set temperature control

Main components

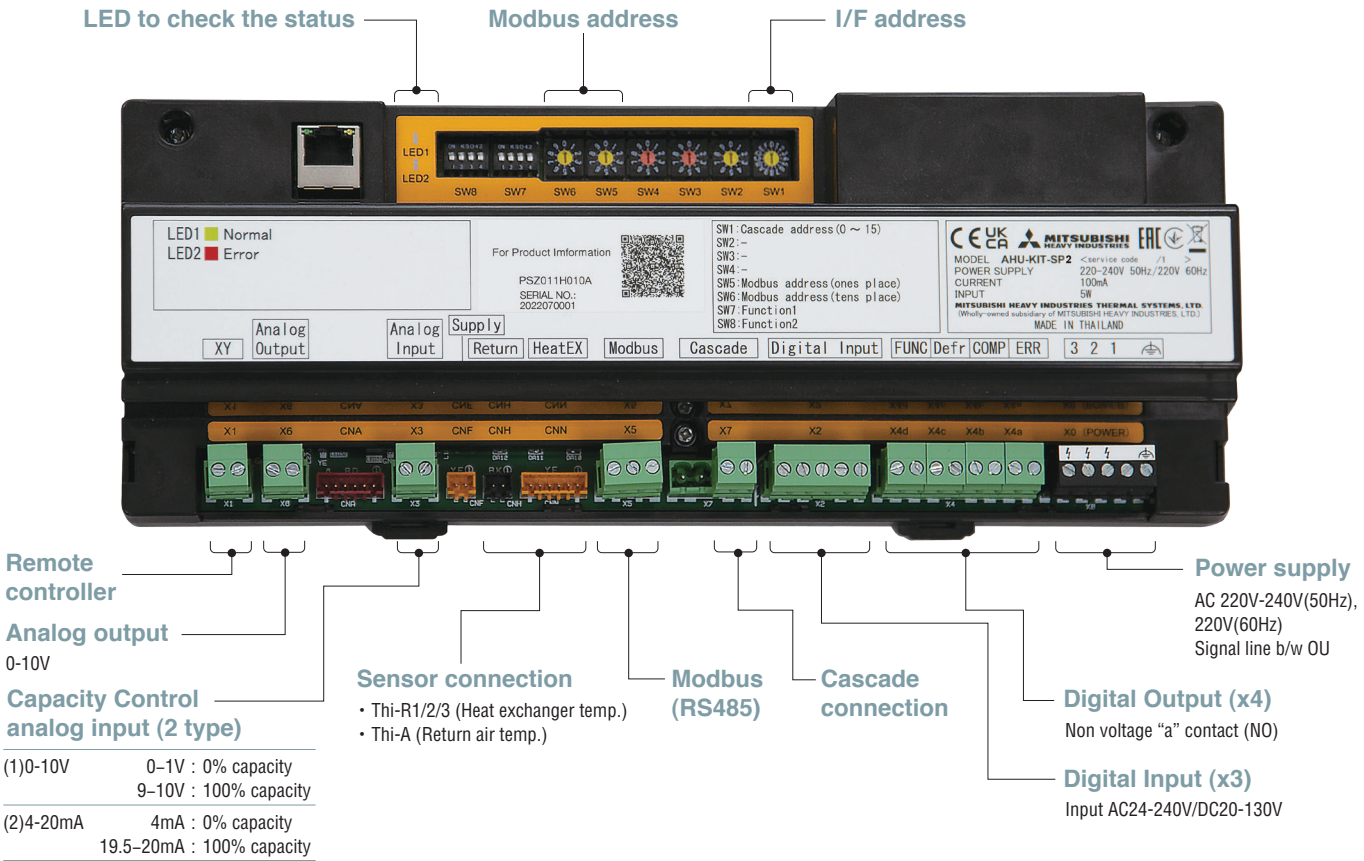

Main functions

Model		AHU-KIT-SP2
Size		W290 x H109.5x D57mm
External Input	Capacity control	○ 0-10V DC, 4-20mA(0-100%)
	Cooling / Heating	○
	Operation On/Off	○
	Emergency stop	○
External Output	Comp On/Off	○
	Run/Stop	○
	Defrost On/Off	○
	Error	○
Modbus (RS-485)		○
Cascade connection		○ Max 16
Standard		EN60335-1

Compatibility PAC & RAC outdoor unit will be in scope.

Capacity	R32	R410A
Small	SRC40/50/60ZSX-W1,W3	–
	FDC71VNX-W	–
Medium	FDC100/125/140VNA-W	FDC100/125/140VNA
	FDC100/125/140VSA-W	FDC100/125/140VSA
	FDC100/125/140VNX-W	FDC100/125/140VNX
	FDC100/125/140VSX-W	FDC100/125/140VSX
Large	FDC200/250/280VSA-W	FDC200/250VSA

System Examples & Advantages

Ex1. General AHU

1. 0-10V/4-20mA capacity control
2. Various I/O for better control
3. R/C can be removed

Compatible with market standard AHU controller.
Provide wide flexibility for AHU solution.

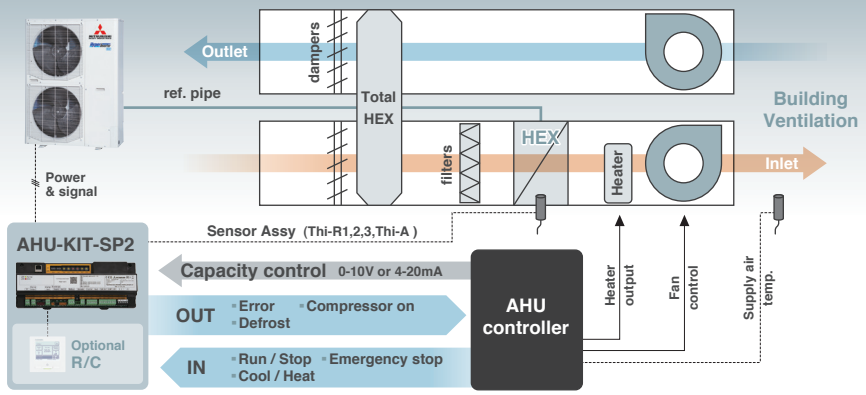

Ex2. Modbus AHU

1. Modbus connection
2. Same control as external I/O

BMS connectability without any extra device.

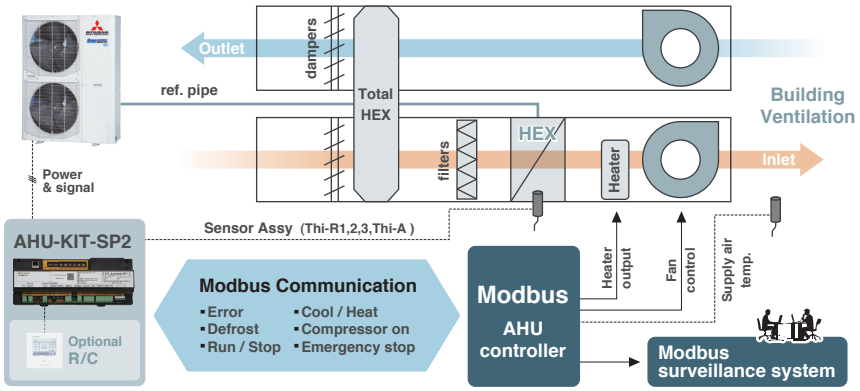

Ex3. Simple AHU

1. Remote contoller connection
2. Adequate external input/output

Simple stand-alone AHU control by set temperature control from RC.

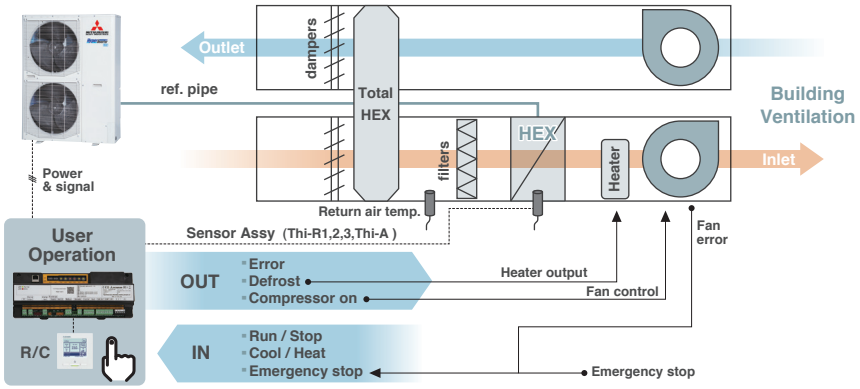

Ex4. Big capacity AHU

Cascade control provides wide range of AHU capacity with small footprint. Multiple outdoor unit increase system reliability and efficiency.

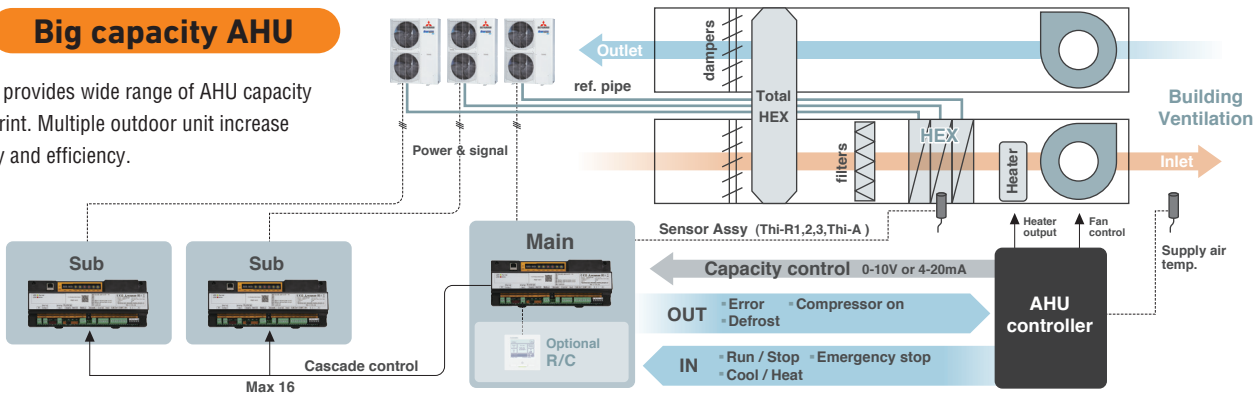

SUPERLINK-Ⅱ

- Control Systems -

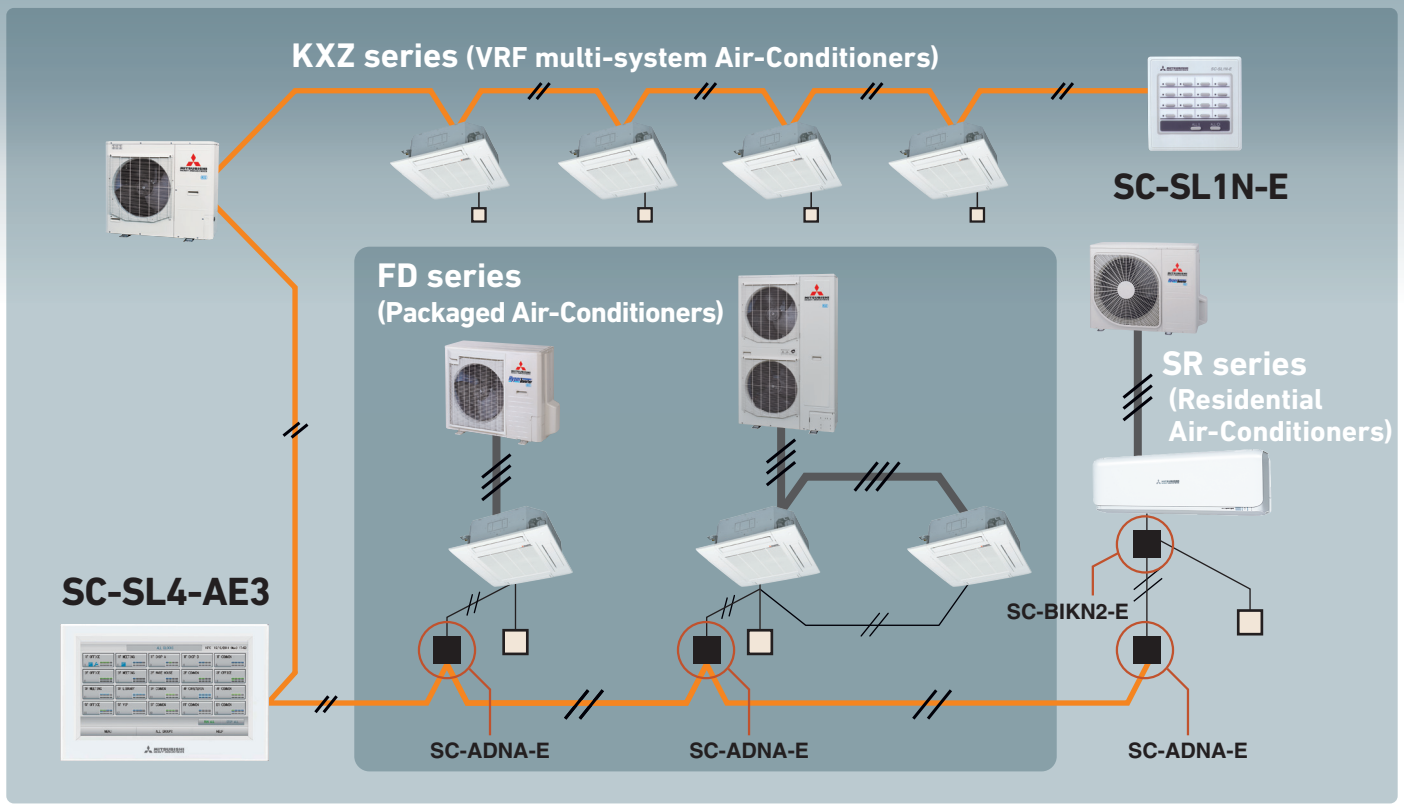

Central Control



SC-SL1N-E

Start/stop control of up to 16 indoor units is possible either individually or collectively. With simple operations, you can achieve centralized control.

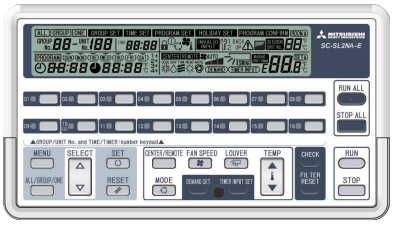

SC-SL2NA-E

Centralized control of up to 64 indoor units. Including weekly timer function as standard.

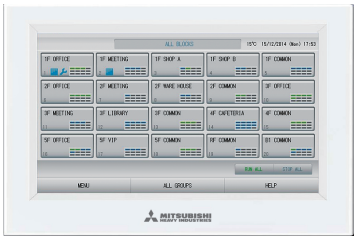

SC-SL4-AE3,-BE3

Easy operation thanks to with a large colour LCD and touch panel. Up to 128 indoor units can be controlled, when SUPERLINK-Ⅱ systems are connected.

Building Management Systems

Production by order



SC-WBGW256*

WEB & BACnet Gateway

SC-WBGW256, up to 256 cells (some cells can have two or more indoor units and total number of indoor units can be up to 256 units) are controlled from the Internet Explorer and centrally from Building Management Systems.

Users can manage up to 1024 units by connecting the four devices !!

* Additional engineering service is required. Please consult your dealer when using these system.

SUPERLINK E BOARD (SC-ADNA-E)

This board is used when conducting control of the single package (wired remote control unit) 1-type series using a network option (SC-SL1N-E, SC-SL2NA-E, etc).

(1) Functions

(a) Transmits the settings from the network option to the indoor units.
(b) Returns the priority indoor unit data in response to a data request from the network option.
(c) Inspects the error status of connected indoor units and transmits the inspection codes to the network option.
(d) A maximum of 16 units can be controlled (if in the same operation mode).

(2) Wiring connection diagram

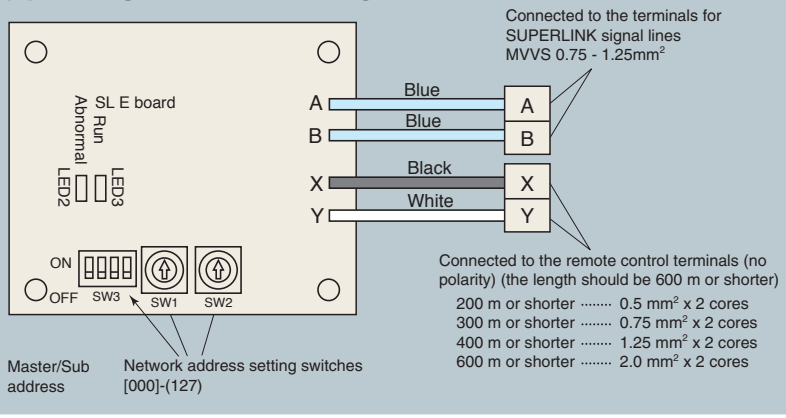

(3) Metal box dimension (unit:mm)

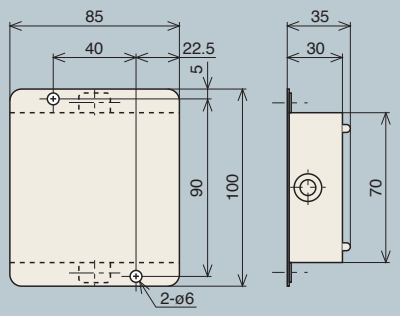

Basic Connections

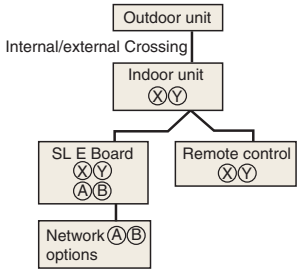

Plural Controls by Multiple Remote Controls. Mixture of Multiple Units

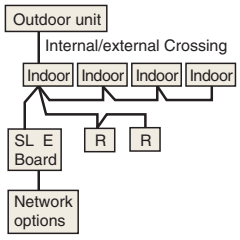

- Transmit the information of plural "Master" units to the network.
- Transmit the abnormalities of the "Slave" units to the network.
- ▶Setting the plural "Master/Slave" units with the dip SW of the printed circuit board.
- ▶Setting the "Master/Slave" remote controls with the dip SW of the remote control board.

Plural Controls by Multiple Remote Controls. Mixture of Multiple Units

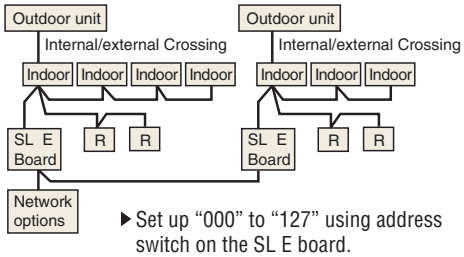

▶Set up "000" to "127" using address switch on the SL E board.

Without Remote Control



▶Set the SL E board dip SW to "Master" SW3-1 ON.
*The network option SL1N-E is not allowed (This will disturb switching of the operation mode)

Wireless Kit

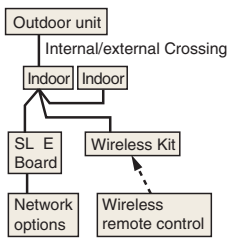

External switch connection CNT, CNTA

All indoor units are equipped with an additional connection point CnT to connect indoor units to an external ON/OFF switch; e.g. time clock, fire alarm, etc.

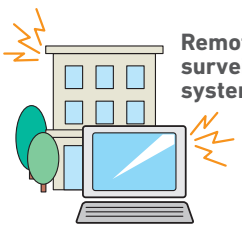

Remote surveillance system

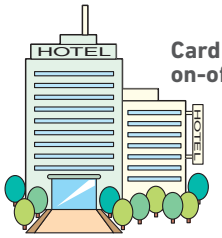

Card key on-off

Energy Efficient and Environmentally Conscious

Several radical design changes and engineering developments have brought about a vast improvement in energy efficiency and environmental protection.

ENERGY LABEL

SEER and SCOP is defined in European regulations listed below.

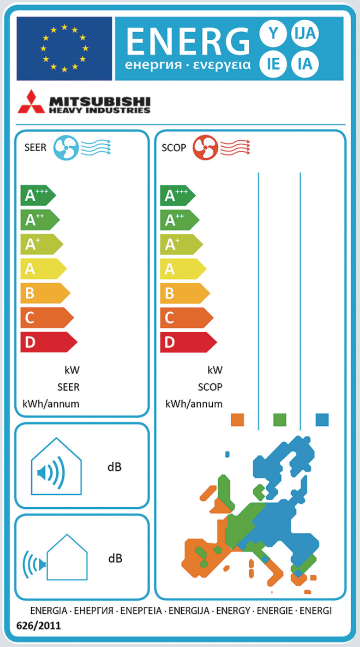

No.626/2011 of 4 May 2011:
energy labeling of air-conditioners
(below cooling capacity 12kW).

No.206/2012 of 6 March 2012:
requirement for air-conditioners and comfort fans.

Seasonal efficiency is the method of rating the true efficiency of heating and cooling products over an entire year.
Set by the EU's new regulation implementing Eco-Design Directive for Energy related Product (ErP) which specifies the minimum efficiency of air-conditioners manufacturers must integrate into their products.
The Seasonal Efficiency rating system that must be used for heating and cooling by all manufacturers are;
SEER - Seasonal Efficiency Ratio (value in cooling)
SCOP - Seasonal Coefficient of Performance (value in heating)
The new rating system will indicate the true efficiency of the energy using product at specified condition.

Employment of lead-free solder

Adapted to RoHS directive

RoHS:Restriction of Hazardous substances

In order to avoid the release of hazardous substances into the environment, all models have utilised lead-free solder application. It has been considered to be difficult to use lead-free solder for practical applications because it requires higher solder temperatures at assembly, which can jeopardize reliability. However our PbF soldering method can produce a higher quality lead-free printed circuit board.

Employment of R32 R410A

All models use refrigerant R32 or R410A characterized by the ozone depletion coefficient being 0.

Excellent Energy Saving

High performance and excellent energy savings are achieved at the same time by heat exchanger's increased capacity and employment of high efficiency DC motor.

Indoor unit			FDT40VH	FDT50VH	FDT60VH	FDT71VH	FDT100VH	FDT100VH	FDT40VHx2	FDT50VHx2
Outdoor unit			SRC40ZSX-W1	SRC50ZSX-W3	SRC60ZSX-W3	FDC71VNX-W	FDC100VNX-W	FDC100VSX-W	FDT71VNX-W	FDC100VNX-W
Energy class (cooling/heating)			A+++/A++	A++/A++	A+++/A++	A++/A++	A++/A+	A++/A+	A++/A++	A++/A+
SEER			8.63	7.93	8.74	7.60	8.00	8.00	7.60	8.24
SCOP (Average climate)			4.62	4.63	5.00	4.61	4.44	4.44	4.66	4.24
Pdesign (cooling/heating (@-10°C))		kW	4.0/3.9	5.0/4.0	5.6/5.2	7.1/5.8	10.0/11.2	10.0/11.2	7.1/5.8	10.0/11.2
Annual electricity consumption (cooling/heating)		kWh/a	163/1167	221/1210	225/1455	327/1762	438/3534	438/3534	327/1742	425/3700
Refrigerant	GWP		R32/675							
	charge	kg/TCO$_2$E$_q$	1.30/0.878			2.75/1.86	4.0/2.7		2.75/1.86	4.0/2.7
Designated heating season			Average							

Indoor unit			FDT50VHx2	FDT100VH	FDT100VH	FDT40VHx2	FDT50VHx2	FDT50VHx2	FDT100VH	FDT100VH
Outdoor unit			FDC100VSX-W	FDC100VNX	FDC100VSX	FDC71VNX	FDC100VNX	FDC100VSX	FDC100VNA-W	FDC100VSA-W
Energy class (cooling/heating)			A++/A+	A+/A+	A+/A+	A+/A+	A+/A+	A+/A+	A++/A++	A++/A++
SEER			8.24	5.90	5.90	5.77	5.92	5.92	7.13	7.13
SCOP (Average climate)			4.24	4.32	4.32	4.34	4.16	4.16	4.60	4.60
Pdesign (cooling/heating (@-10°C))		kW	10.0/11.2	10.0/11.2	10.0/11.2	7.1/5.8	10.0/11.2	10.0/11.2	10.0/8.5	10.0/8.5
Annual electricity consumption (cooling/heating)		kWh/a	425/3700	594/3634	594/3634	431/1873	592/3772	592/3772	491/2590	491/2590
Refrigerant	GWP		R32/675	R410A/2088					R32/675	
	charge	kg/TCO$_2$E$_q$	4.0/2.7	4.5/9.396		2.95/6.160	4.5/9.396		3.3/2.228	
Designated heating season			Average							

Indoor unit			FDT50VHx2	FDT50VHx2	FDT100VH	FDT100VH	FDT50VHx2	FDT50VHx2	FDT71VH	FDT100VH
Outdoor unit			FDC100VNA-W	FDC100VSA-W	FDC100VNA	FDC100VSA	FDC100VNA	FDC100VSA	FDC71VNP-W	FDC90VNP-W
Energy class (cooling/heating)			A++/A+	A++/A+	A++/A+	A++/A+	A++/A+	A++/A+	A++/A+	A++/A+
SEER			7.41	7.41	6.78	6.78	6.89	6.89	6.34	7.10
SCOP (Average climate)			4.47	4.47	4.52	4.52	4.47	4.47	4.38	4.56
Pdesign (cooling/heating (@-10°C))		kW	10.0/8.5	10.0/8.5	10.0/8.5	10.0/8.5	10.0/8.5	10.0/8.5	7.10/5.70	9.0/6.0
Annual electricity consumption (cooling/heating)		kWh/a	473/2665	473/2665	516/2633	516/2633	508/2665	508/2665	393/1822	444/1842
Refrigerant	GWP		R32/675		R410A/2088				R32/675	
	charge	kg/TCO$_2$E$_q$	3.3/2.228		3.8/7.934				1.30/0.878	1.70/1.148
Designated heating season			Average							

- Refrigerant contained in the products is a fluorinated greenhouse gas listed in Regulation (EU) No 517/2014.
- SEER/SCOP are based on EN14825.2016 and Commission regulation(EU) No.2016/2281. Temperature conditions for calculating SCOP are based on "Average climate".
- 'tonne(s) of CO_2 equivalent' means a quantity of greenhouse gases- expressed as the product of the weight of the greenhouse gases in metric tonnes and of their global warming potential.

Indoor unit			FDT100VH
Outdoor unit			FDC100VNP-W
Energy class (cooling/heating)			A++/A+
SEER			7.08
SCOP (Average climate)			4.53
Pdesign (cooling/heating (@-10°C))		kW	10.0/6.4
Annual electricity consumption (cooling/heating)		kWh/a	495/1977
Refrigerant	GWP		R32/675
	charge	kg/TCO$_2$E$_q$	1.70/1.148
Designated heating season			Average

Indoor unit			FDTC40VH	FDTC50VH	FDTC60VH	FDTC40VHx2	FDTC50VHx2	FDTC50VHx2	FDTC50VHx2	FDTC50VHx2
Outdoor unit			SRC40ZSX-W1	SRC50ZSX-W3	SRC60ZSX-W3	FDC71VNX-W	FDC100VNX-W	FDC100VSX-W	FDC100VNX	FDC100VSX
Energy class (cooling/heating)			A++/A+	A++/A+	A++/A+	A++/A+	A++/A+	A++/A+	A/A	A/A
SEER			6.94	6.52	6.45	6.70	6.58	6.58	5.56	5.56
SCOP (Average climate)			4.37	4.30	4.10	4.40	4.16	4.16	3.87	3.87
Pdesign (cooling/heating (@-10°C))		kW	4.0/4.0	5.0/4.3	5.6/5.1	7.1/6.0	10.0/11.2	10.0/11.2	10.0/10.8	10.0/10.8
Annual electricity consumption (cooling/heating)		kWh/a	202/1283	269/1401	304/1744	371/1911	532/3772	532/3772	630/3910	630/3910
Refrigerant	GWP		R32/675						R410A/2088	
	charge	kg/TCO$_2$E$_q$	1.30/0.878			2.75/1.86	4.0/2.7		4.5/9.396	
Designated heating season			Average							

Indoor unit			FDTC50VHx2	FDTC50VHx2	FDTC50VHx2	FDTC50VHx2
Outdoor unit			FDC100VNA-W	FDC100VSA-W	FDC100VNA	FDC100VSA
Energy class (cooling/heating)			A++/A+	A++/A+	A+/A+	A+/A+
SEER			6.17	6.17	6.00	6.00
SCOP (Average climate)			4.38	4.38	4.38	4.38
Pdesign (cooling/heating (@-10°C))		kW	10.0/8.5	10.0/8.5	10.0/8.4	10.0/8.4
Annual electricity consumption (cooling/heating)		kWh/a	567/2715		584/2682	584/2682
Refrigerant	GWP		R32/675		R410A/2088	
	charge	kg/TCO$_2$E$_q$	3.3/2.228		3.8/7.934	
Designated heating season			Average			

Indoor unit			FDU71VH	FDU100VH	FDU100VH	FDU100VH	FDU100VH	FDU100VH	FDU100VH	FDU100VH
Outdoor unit			FDC71VNX-W	FDC100VNX-W	FDC100VSX-W	FDC100VNX	FDC100VSX	FDC100VNA-W	FDC100VSA-W	FDC100VNA
Energy class (cooling/heating)			A++/A+	A++/A+	A++/A+	A/A+	A/A+	A++/A+	A++/A+	A++/A+
SEER			6.89	6.29	6.29	5.22	5.19	6.11	6.11	6.11
SCOP (Average climate)			4.47	4.13	4.13	4.10	4.10	4.19	4.19	4.19
Pdesign (cooling/heating (@-10°C))		kW	7.1/6.0	10.0/11.2	10.0/11.2	10.0/13.0	10.0/13.0	10.0/8.5	10.0/8.5	10.0/8.5
Annual electricity consumption (cooling/heating)		kWh/a	361/1878	557/3800	557/3800	670/4441	675/4443	574/2843	574/2843	573/2844
Refrigerant	GWP		R32/675			R410A/2088		R32/675		R410A/2088
	charge	kg/TCO$_2$E$_q$	2.75/1.86	4.0/2.7		4.5/9.396		3.3/2.228		3.8/7.934
Designated heating season			Average							

Indoor unit			FDU100VH	FDU71VH	FDU100VH	FDU100VH
Outdoor unit			FDC100VSA	FDC71VNP-W	FDC90VNP-W	FDC100VNP-W
Energy class (cooling/heating)			A++/A+	A+/A+	A++/A+	A++/A+
SEER			6.11	5.86	6.66	6.11
SCOP (Average climate)			4.19	4.12	4.22	4.13
Pdesign (cooling/heating (@-10°C))		kW	10.0/8.5	7.10/5.70	9.0/6.0	10.0/6.4
Annual electricity consumption (cooling/heating)		kWh/a	573/2844	425/1937	474/1990	573/2169
Refrigerant	GWP		R410A/2088	R32/675		
	charge	kg/TCO$_2$E$_q$	3.8/7.934	1.3/0.878	1.7/1.148	
Designated heating season			Average			

Indoor unit			FDUM40VH	FDUM50VH	FDUM60VH	FDUM71VH	FDUM100VH	FDUM100VH	FDUM40VHx2	FDUM50VHx2
Outdoor unit			SRC40ZSX-W1	SRC50ZSX-W3	SRC60ZSX-W3	FDC71VNX-W	FDC100VNX-W	FDC100VSX-W	FDC71VNX-W	FDC100VNX-W
Energy class (cooling/heating)			A++/A	A+/A	A++/A+	A++/A+	A++/A+	A++/A+	A++/A+	A++/A
SEER			6.11	5.82	6.43	6.89	6.29	6.29	6.38	6.36
SCOP (Average climate)			3.81	3.89	4.37	4.45	4.13	4.13	4.15	3.88
Pdesign (cooling/heating (@-10°C))		kW	4.0/3.0	5.0/3.7	5.6/4.7	7.1/6.0	10.0/11.2	10.0/11.2	7.1/6.0	10.0/10.0
Annual electricity consumption (cooling/heating)		kWh/a	230/1102	301/1332	305/1508	361/1878	557/3800	557/3800	390/2025	550/3605
Refrigerant	GWP		R32/675							
	charge	kg/TCO$_2$E$_q$	1.30/0.878			2.75/1.86	4.0/2.7		2.75/1.86	4.0/2.7
Designated heating season			Average							

Indoor unit			FDUM50VHx2	FDUM100VH	FDUM100VH
Outdoor unit			FDC100VSX-W	FDC100VNX	FDC100VSX
Energy class (cooling/heating)			A++/A	A/A+	A/A+
SEER			6.36	5.22	5.19
SCOP (Average climate)			3.88	4.10	4.10
Pdesign (cooling/heating (@-10°C))		kW	10.0/10.0	10.0/13.0	10.0/13.0
Annual electricity consumption (cooling/heating)		kWh/a	550/3605	670/4441	675/4444
Refrigerant	GWP		R32/675	R410A/2088	
	charge	kg/TCO$_2$E$_q$	4.0/2.7	4.5/9.396	
Designated heating season			Average		

Energy Efficient and Environmentally Conscious

Indoor unit			FDUM50VHx2	FDUM50VHx2	FDUM100VH	FDUM100VH	FDUM50VHx2	FDUM50VHx2	FDUM100VH	FDUM100VH
Outdoor unit			FDC100VNX	FDC100VSX	FDC100VNA-W	FDC100VSA-W	FDC100VNA-W	FDC100VSA-W	FDC100VNA	FDC100VSA
Energy class (cooling/heating)			A/A	A/A	A++/A+	A++/A+	A+/A+	A+/A+	A++/A+	A++/A+
SEER			5.14	5.11	6.11	6.11	5.82	5.82	6.11	6.11
SCOP (Average climate)			3.88	3.87	4.19	4.19	4.00	4.00	4.19	4.19
Pdesign (cooling/heating (@-10°C))		kW	10.0/10.0	10.0/10.0	10.0/8.5	10.0/8.5	10.0/8.5	10.0/8.5	10.0/8.5	10.0/8.5
Annual electricity consumption (cooling/heating)		kWh/a	681/3606	685/3618	574/2843	574/2843	602/2974	602/2974	573/2844	573/2844
Refrigerant	GWP		R410A/2088		R32/675				R410A/2088	
	charge	kg/TCO$_2$E$_q$	4.5/9.396		3.3/2.228				3.8/7.934	
Designated heating season			Average							

Indoor unit			FDUM50VHx2	FDUM50VHx2	FDUM71VH	FDUM100VH	FDUM100VH
Outdoor unit			FDC100VNA	FDC100VSA	FDC71VNP-W	FDC90VNP-W	FDC100VNP-W
Energy class (cooling/heating)			A/A	A/A	A+/A+	A++/A+	A++/A+
SEER			5.50	5.50	5.86	6.65	6.11
SCOP (Average climate)			3.94	3.94	4.12	4.22	4.13
Pdesign (cooling/heating (@-10°C))		kW	10.0/8.5	10.0/8.5	7.10/5.70	9.0/6.0	10.0/6.4
Annual electricity consumption (cooling/heating)		kWh/a	637/3024	637/3024	425/1937	474/1990	573/2169
Refrigerant	GWP		R410A/2088		R32/675		
	charge	kg/TCO$_2$E$_q$	3.8/7.934		1.3/0.878	1.7/1.148	
Designated heating season			Average				

Indoor unit			SRK71ZR-W(F)	SRK100ZR-W(F)	SRK100ZR-W(F)	SRK50ZSX-Wx2	SRK50ZSX-Wx2	SRK50ZSX-Wx2	SRK50ZSX-Wx2	SRK100ZR-W(F)
Outdoor unit			FDC71VNX-W	FDC100VNX-W	FDC100VSX-W	FDC100VNX-W	FDC100VSX-W	FDC100VNX	FDC100VSX	FDC100VNA-W
Energy class (cooling/heating)			A++/A+	A++/A	A++/A	A++/A+	A++/A+	A++/A+	A++/A+	A++/A+
SEER			6.80	6.54	6.54	7.66	7.66	6.11	6.11	6.13
SCOP (Average climate)			4.56	4.01	4.01	4.25	4.25	4.16	4.16	4.33
Pdesign (cooling/heating (@-10°C))		kW	7.1/5.8	10.0/10.5	10.0/10.5	10.0/11.2	10.0/11.2	10.0/10.4	10.0/10.4	10.0/8.5
Annual electricity consumption (cooling/heating)		kWh/a	366/1782	535/3671	535/3671	457/3691	457/3691	574/3504	574/3504	571/2746
Refrigerant	GWP		R32/675					R410A/2088		R32/675
	charge	kg/TCO$_2$E$_q$	2.75/1.86	4.0/2.7				4.5/9.396		3.3/2.228
Designated heating season			Average							

Indoor unit			SRK100ZR-W(F)	SRK50ZSX-Wx2	SRK50ZSX-Wx2	SRK100ZR-W	SRK100ZR-W	SRK71ZR-W(F)	SRK100ZR-W(F)
Outdoor unit			FDC100VSA-W	FDC100VNA-W	FDC100VSA-W	FDC100VNA	FDC100VSA	FDC71VNP-W	FDC100VNP-W
Energy class (cooling/heating)			A++/A+	A++/A+	A++/A+	A++/A+	A++/A+	A++/A+	A++/A+
SEER			6.13	7.05	7.05	6.26	6.26	6.75	6.11
SCOP (Average climate)			4.33	4.47	4.47	4.33	4.33	4.55	4.14
Pdesign (cooling/heating (@-10°C))		kW	10.0/8.5	10.0/8.5	10.0/8.5	10.0/8.5	10.0/8.5	7.10/5.70	9.6/6.0
Annual electricity consumption (cooling/heating)		kWh/a	571/2746	497/2661	497/2661	560/2750	560/2750	369/1756	551/2028
Refrigerant	GWP		R32/675			R410A/2088		R32/675	
	charge	kg/TCO$_2$E$_q$	3.3/2.228			3.8/7.934		1.3/0.878	1.7/1.148
Designated heating season			Average						

Indoor unit			FDE40VH	FDE50VH	FDE60VH	FDE71VH	FDE100VH	FDE100VH	FDE40VHx2	FDE50VHx2
Outdoor unit			SRC40ZSX-W1	SRC50ZSX-W3	SRC60ZSX-W3	FDC71VNX-W	FDC100VNX-W	FDC100VSX-W	FDC71VNX-W	FDC100VNX-W
Energy class (cooling/heating)			A++/A+	A++/A+	A++/A+	A++/A+	A++/A+	A++/A+	A++/A+	A++/A+
SEER			6.46	6.15	6.72	6.58	7.00	7.00	6.48	6.76
SCOP (Average climate)			4.02	4.07	4.41	4.45	4.24	4.24	4.49	4.00
Pdesign (cooling/heating (@-10°C))		kW	4.0/3.0	5.0/3.8	5.6/4.5	7.1/6.0	10.0/11.2	10.0/11.2	7.1/6.0	10.0/9.8
Annual electricity consumption (cooling/heating)		kWh/a	217/1045	285/1307	292/1430	378/1889	501/3700	501/3700	384/1870	518/3434
Refrigerant	GWP		R32/675							
	charge	kg/TCO$_2$E$_q$	1.30/0.878			2.75/1.86	4.0/2.7		2.75/1.86	4.0/2.7
Designated heating season			Average							

Indoor unit			FDE50VHx2	FDE100VH	FDE100VH	FDE50VHx2	FDE50VHx2	FDE100VH	FDE100VH	FDE50VHx2
Outdoor unit			FDC100VSX-W	FDC100VNX	FDC100VSX	FDC100VNX	FDC100VSX	FDC100VNA-W	FDC100VSA-W	FDC100VNA-W
Energy class (cooling/heating)			A++/A+	A+/A+	A+/A+	A/A	A/A	A++/A+	A++/A+	A++/A+
SEER			6.76	5.89	5.84	5.53	5.49	6.67	6.67	6.16
SCOP (Average climate)			4.00	4.18	4.17	3.94	3.94	4.31	4.31	4.10
Pdesign (cooling/heating (@-10°C))		kW	10.0/9.8	10.0/11.2	10.0/11.2	10.0/10.8	10.0/10.8	10.0/8.5	10.0/8.5	10.0/8.5
Annual electricity consumption (cooling/heating)		kWh/a	518/3434	595/3756	599/3762	634/3840	638/3841	525/2764	525/2764	569/2906
Refrigerant	GWP		R32/675	R410A/2088				R32/675		
	charge	kg/TCO$_2$E$_q$	4.0/2.7	4.5/9.396				3.3/2.228		
Designated heating season			Average							

Indoor unit			FDE50VHx2	FDE100VH	FDE100VH	FDE50VHx2	FDE50VHx2	FDE71VH	FDE100VH	FDE100VH
Outdoor unit			FDC100VSA-W	FDC100VNA	FDC100VSA	FDC100VNA	FDC100VSA	FDC71VNP-W	FDC90VNP-W	FDC100VNP-W
Energy class (cooling/heating)			A++/A+	A++/A+	A++/A+	A+/A+	A+/A+	A++/A+	A++/A+	A++/A+
SEER			6.16	6.35	6.35	5.71	5.71	6.44	6.78	6.63
SCOP (Average climate)			4.10	4.31	4.31	4.10	4.10	4.32	4.46	4.24
Pdesign (cooling/heating (@-10°C))		kW	10.0/8.5	10.0/8.5	10.0/8.5	10.0/8.5	10.0/8.5	7.10/5.70	9.0/5.8	10.0/6.0
Annual electricity consumption (cooling/heating)		kWh/a	569/2906	552/2763	552/2763	613/2905	613/2905	386/1849	465/1822	529/1984
Refrigerant	GWP		R32/675	R410A/2088				R32/675		
	charge	kg/TCO$_2$E$_q$	3.3/2.228	3.8/7.934				1.30/0.878	1.70/1.148	
Designated heating season			Average							

Indoor unit			FDF71VH1	FDF100VH1	FDF100VH1	FDF100VD2	FDF100VD2	FDF100VH1	FDF100VH1
Outdoor unit			FDC71VNX-W	FDC100VNX-W	FDC100VSX-W	FDC100VNX	FDC100VSX	FDC100VNA-W	FDC100VSA-W
Energy class (cooling/heating)			A++/A+	A++/A	A++/A	A/A	A/A	A+/A+	A+/A+
SEER			6.25	6.10	6.10	5.20	5.17	5.76	5.76
SCOP (Average climate)			4.03	3.84	3.84	3.80	3.80	4.00	4.00
Pdesign (cooling/heating (@-10°C))		kW	7.10/6.0	10.0/11.2	10.0/11.2	10.0/13.0	10.0/13.0	10.0/8.50	10.0/8.50
Annual electricity consumption (cooling/heating)		kWh/a	376/2085	574/4084	574/4084	673/4795	678/4793	608/2973	608/2973
Refrigerant	GWP		R32/675			R410A/2088		R32/675	
	charge	kg/TCO$_2$E$_q$	2.75 / 1.86	4.0 / 2.7		4.5/9.396		3.3/2.23	
Designated heating season			Average						

Indoor unit			FDF100VD2	FDF100VD2	FDF71VH1	FDF100VH1	FDF100VH1
Outdoor unit			FDC100VNA	FDC100VSA	FDC71VNP-W	FDC90VNP-W	FDC100VNP-W
Energy class (cooling/heating)			A+/A+	A+/A+	A+/A	A+/A+	A/A
SEER			5.70	5.70	5.85	5.91	5.43
SCOP (Average climate)			4.00	4.00	3.91	4.24	3.94
Pdesign (cooling/heating (@-10°C))		kW	10.0/8.5	10.0/8.5	7.10/5.70	9.00/6.00	10.0/6.40
Annual electricity consumption (cooling/heating)		kWh/a	614/2978	614/2978	425/2039	535/1981	645/2274
Refrigerant	GWP		R410A/2088		R32/675		
	charge	kg/TCO$_2$E$_q$	3.8/7.934		1.3/0.878	1.7/1.148	
Designated heating season			Average				

• Refrigerant contained in the products is a fluorinated greenhouse gas listed in Regulation (EU) No 517/2014.
• SEER/SCOP are based on EN14825.2016 and Commission regulation(EU) No.2016/2281. Temperature conditions for calculating SCOP are based on "Average climate".
• 'tonne(s) of CO_2 equivalent' means a quantity of greenhouse gases- expressed as the product of the weight of the greenhouse gases in metric tonnes and of their global warming potential.

SEER and SCOP is defined in European regulations listed below.

No.2016/2281: requirement for air-heating products, cooling products, high temperature process chillers and fan coil units.Seasonal efficiency is the new way of rating the true efficiency of heating and cooling products over an entire year.
Set by the EU's new regulation implementing Eco-Design Directive for Energy Related Product (ErP) which specifies the minimum efficiency of air-conditioners manufacturers must integrate into their products.
The new Seasonal Efficiency rating system that must be used for heating and cooling by all manufacturers are;

Indoor unit	FDT125VH	FDT140VH	FDT125VH	FDT140VH	FDT125VH	FDT140VH	FDT125VH	FDT140VH	FDT125VH	FDT140VH	FDT125VH	FDT140VH
Outdoor unit	FDC125VNX-W	FDC140VNX-W	FDC125VSX-W	FDC140VSX-W	FDC125VNX	FDC140VNX	FDC125VSX	FDC140VSX	FDC125VNA-W	FDC140VNA-W	FDC125VSA-W	FDC140VSA-W
SEER	7.64	7.20	7.64	7.20	6.18	5.97	6.18	6.11	6.53	6.17	6.53	6.17
SCOP (Average climate)	4.44	4.35	4.26	4.14	4.08	4.05	4.03	3.99	4.38	4.42	4.38	4.42

Indoor unit	FDT125VH	FDT140VH	FDT125VH	FDT140VH	FDT125VH	FDU125VH	FDU140VH	FDU125VH	FDU140VH	FDU125VH	FDU140VH	FDU125VH
Outdoor unit	FDC125VNA	FDC140VNA	FDC125VSA	FDC140VSA	FDC125VNP-W	FDC125VNX-W	FDC140VNX-W	FDC125VSX-W	FDC140VSX-W	FDC125VNX	FDC140VNX	FDC125VSX
SEER	6.52	6.16	6.52	6.16	6.37	6.10	5.79	6.10	5.79	5.34	5.22	5.49
SCOP (Average climate)	4.38	4.28	4.38	4.28	4.27	4.06	3.99	3.92	3.88	3.87	3.85	3.91

Indoor unit	FDU140VH	FDU125VH	FDU140VH	FDU125VH	FDU140VH	FDU200VH	FDU250VH	FDU280VH	FDU125VH	FDU140VH	FDU125VH	FDU140VH
Outdoor unit	FDC140VSX	FDC125VNA-W	FDC140VNA-W	FDC125VSA-W	FDC140VSA-W	FDC200VSA-W	FDC250VSA-W	FDC280VSA-W	FDC125VNA	FDC140VNA	FDC125VSA	FDC140VSA
SEER	5.36	5.57	5.30	5.57	5.30	5.10	4.88	4.92	5.26	5.08	5.26	5.08
SCOP (Average climate)	3.88	4.13	4.01	4.13	4.01	3.55	3.54	3.70	4.13	4.01	4.13	4.01

Indoor unit	FDU200VH	FDU250VH	FDU125VH	FDUM125VH	FDUM140VH	FDUM125VH	FDUM140VH	FDUM125VH	FDUM140VH	FDUM125VH	FDUM140VH	FDUM125VH
Outdoor unit	FDC200VSA	FDC250VSA	FDC125VNP-W	FDC125VNX-W	FDC140VNX-W	FDC125VSX-W	FDC140VSX-W	FDC125VNX	FDC140VNX	FDC125VSX	FDC140VSX	FDC125VNA-W
SEER	5.06	4.82	5.50	6.10	5.79	6.10	5.79	5.34	5.22	5.49	5.36	5.57
SCOP (Average climate)	3.52	3.51	4.01	4.06	3.99	3.92	3.88	3.87	3.85	3.91	3.88	4.13

Indoor unit	FDUM140VH	FDUM125VH	FDUM140VH	FDUM125VH	FDUM140VH	FDUM125VH	FDUM140VH	FDUM125VH	FDE125VH	FDE140VH	FDE125VH	FDE140VH
Outdoor unit	FDC140VNA-W	FDC125VSA-W	FDC140VSA-W	FDC125VNA	FDC140VNA	FDC125VSA	FDC140VSA	FDC125VNP-W	FDC125VNX-W	FDC140VNX-W	FDC125VSX-W	FDC140VSX-W
SEER	5.30	5.57	5.30	5.26	5.08	5.26	5.08	5.50	6.53	6.29	6.53	6.29
SCOP (Average climate)	4.01	4.13	4.01	4.13	4.01	4.13	4.01	4.01	4.20	4.17	4.02	3.96

Indoor unit	FDE125VH	FDE140VH	FDE125VH	FDE140VH	FDE125VH	FDE140VH	FDE125VH	FDE140VH	FDE125VH	FDE140VH	FDE125VH	FDE140VH
Outdoor unit	FDC125VNX	FDC140VNX	FDC125VSX	FDC140VSX	FDC125VNA-W	FDC140VNA-W	FDC125VSA-W	FDC140VSA-W	FDC125VNA	FDC140VNA	FDC125VSA	FDC140VSA
SEER	5.56	5.41	5.74	5.56	6.03	5.76	6.03	5.76	6.03	5.76	6.03	5.76
SCOP (Average climate)	3.71	3.66	3.66	3.62	4.30	4.24	4.30	4.24	4.30	4.15	4.30	4.15

Indoor unit	FDE125VH	FDF125VH1	FDF140VH1	FDF125VH1	FDF140VH1	FDF125VD	FDF140VD	FDF125VD	FDF140VD	FDF125VH1	FDF140VH1	FDF125VH1
Outdoor unit	FDC125VNP-W	FDC125VNX-W	FDC140VNX-W	FDC125VSX-W	FDC140VSX-W	FDC125VNX	FDC140VNX	FDC125VSX	FDC140VSX	FDC125VNA-W	FDC140VNA-W	FDC125VSA-W
SEER	5.95	5.96	5.81	5.96	5.81	4.97	4.80	5.11	4.94	5.36	5.19	5.36
SCOP (Average climate)	4.21	3.89	3.81	3.85	3.72	3.60	3.56	3.60	3.60	3.96	3.99	3.96

Indoor unit	FDF140VH1	FDF125VD	FDF140VD	FDF125VD	FDF140VD
Outdoor unit	FDC140VSA-W	FDC125VNA	FDC140VNA	FDC125VSA	FDC140VSA
SEER	5.19	5.36	5.09	5.36	5.03
SCOP (Average climate)	3.99	3.96	4.16	3.96	4.16

Before starting use

Heating performance
The heating performance values (kW) described in the catalogue are the values obtained by operating at an outdoor temperature of 7°C and indoor temperature of 20°C as set forth in the ISO Standards.
Heating performance is reduced as the temperature drops. If the outdoor temperature is too low and the heating performance is insufficient, use other heating appliances as well.

Indication of sound values
The sound values are the values (A scale) measured in a chamber such as an anechoic chamber following the ISO Standards. In the actual installation state, the value is normally larger than the values given in the catalogue due to the effect of surrounding noise and echo. Take this into consideration when installing.

Use in oil atmosphere
Avoid installing this unit in an atmosphere where oil scatters or builds up, such as in a kitchen or machine factory.
If the oil adheres to the heat exchanger, the heat exchanging performance will drop, mist may be generated, and the synthetic resin parts may deform and break.

Use in acidic or alkaline atmosphere
If this unit is used in acidic atmosphere such as hot spring areas having high level of sulfuric gases or in alkaline atmosphere including ammonia or calcium chloride, places where the exhaust of the heat exchanger is sucked in, or at coastal areas where the unit is subject to salt breezes, the outer plate or heat exchanger, etc., will corrode. Please ask a dealer or specialist when you use an air-conditioner in places differing from a general atmosphere.

Use in places with high ceilings
If the ceiling is high, install a circulator to improve the heat and air flow distribution when heating.

Refrigerant leakage
The refrigerant (R32, R410A) used for air-conditioner is non-toxic and in its original state.
However, in consideration of a state where the refrigerant leaks into the room, measures against refrigerant leaks must be taken in small rooms where the tolerable level could be exceeded. Take measures by installing ventilation devices, etc.

Use in snowy areas
Take the following measures when installing the outdoor unit in snowy areas.

·Snow prevention
Install a snow-prevention hood so that the snow does not obstruct the air intake port or enter and freeze in the outdoor unit.

·Snow piling
In areas with heavy snow fall, the piled snow could block the air intake port. In this case, a frame that is 50cm or higher than the estimated snow fall must be installed underneath the outdoor unit.

Automatic defrosting device
If the temperature is low, and the humidity is high, frost will stick to the heat exchanger of the outdoor unit. If continued to use, the heating performance will drop.
The "Automatic defrosting device" will function to remove this frost. After heating for approx. three to ten minutes, it will stop, and the frost will be removed. After defrosting, hot air will be blown again.

Servicing
After the air-conditioner has been used for several seasons, dirt will build up in the air-conditioner causing the performance to drop. In addition to regular servicing, a maintenance contract by a specialist is recommended.

Safety Precautions

Air-conditioner usage target
The air-conditioner described in this catalogue is a dedicated cooling/heating device for human use.
Do not use it for special applications such as the storage of food items, animals or plants, precision devices or valuable art, etc.
This could cause the quality of the items to drop, etc.
Do not use this for cooling vehicles or ships. Water leakage or current leaks could occur.

Before use
Always read the "User's Manual" thoroughly before starting use.

Installation
Always commission the installation to a dealer or specialist. Improper installation will lead to water leakage, electric shocks and fires.
Make sure that the outdoor unit is stable in installation. Fix the unit to stable base.

Usage place
Do not install in places where combustible gas could leak or where there are sparks.
Installation in a place where combustible gas could be generated, flow or accumulate, or places containing carbon fibers could lead to fires.

Certified ISO 9001

JQA-0709

Mitsubishi Heavy Industries - Mahajak Air Conditioners Co., Ltd. has been certified of Quality Management System in Accordance with ISO 9001 by TUV NORD (Thailand) Ltd.

Certified ISO 14001

Mitsubishi Heavy Industries - Mahajak Air Conditioners Co., Ltd. has been certified of Environmental Management System in accordance with ISO 14001 by TUV NORD (Thailand) Ltd.

Mitsubishi Heavy Industries Thermal Systems, Ltd. Participate in the Eurovent certification program for comfort air-conditioner (AC1 & AC2) .Check ongoing validity of certificate: www.eurovent-certification.com

Mitsubishi Heavy Industries Thermal Systems, Ltd.
(Wholly-owned subsidiary of MITSUBISHI HEAVY INDUSTRIES, LTD.)
2-3, Marunouchi 3-chome, Chiyoda-ku, Tokyo, 100-8332, Japan
https://www.mhi-mth.co.jp/en/

Because of our policy of continuous improvement, we reserve the right to make changes in all specifications without notice.

26P01EU November 2025 F Edited in Japan